CHAPTER IV

REFERENCE PLATES

1.	TITLE BLOCK (Cover Sheet Only)	PLATE #1
2.	TITLE BLOCK	PLATE #2
3.	TITLE BLOCK (COE Prepared Topography Or Logs of Borings Drawings)	PLATE #3
4.	TITLE BLOCK (Site Adaptation Cover Sheet)	PLATE #4
5.	TITLE BLOCK (Site Adaptation other than Cover Sheet)	PLATE #5
6.	SCHEDULE OF DRAWINGS	PLATE #6
7.	GRAPHIC SCALES	PLATE #7
8.	DOOR SCHEDULE	PLATE #8
9.	WINDOW TYPES	PLATE #9
10.	FINISH SCHEDULE, FINISH LEGEND AND COLOR SCHEME INSTRUCTIONS	PLATE #10
11.	SAMPLE SCHEDULE FOR PLATE 10	PLATE #11
12.	EXAMPLE FLOOR PLAN FOR PLATE 10	PLATE #12
13.	SAMPLE EXTERIOR COLOR SCHEDULE	PLATE #13
14.	SAMPLE VICINITY MAP	PLATE #14
15.	SAMPLE LOCATION MAP	PLATE #15
16.	HANDICAPPED CHECKLIST (BLANK)	PLATE #16
17.	ENVIRONMENTAL PERMIT MATRIX (BLANK)	PLATE #17
18.	GROSS AREA TAKEOFF	PLATE #18
19.	SUPPORT DOCUMENT COVER SHEET INSTRUCTIONS	PLATE #19
20.	SUPPORT DOCUMENT COVER SHEET (BLANK)	PLATE #20
21.	AIR FORCE FORM 108 - AIR CONDITIONING LOAD ESTIMATE	PLATE #21
22.	SAMPLE COMPLETED AIR FORCE FORM 108	PLATE #22

"If it hasn't been reviewed,
it hasn't been designed."

TITLE BLOCK
(COVER SHEET ONLY)

REVISION	DATE	DESCRIPTION	BY	BY
△				
△				

NAME AND ADDRESS OF A-E FIRM
UNDER CONTRACT TO CESPK

DEPARTMENT OF THE ARMY
SACRAMENTO DISTRICT, CORPS OF ENGINEERS
SACRAMENTO, CALIFORNIA

DESIGNED: *

DRAWN: *

CHECKED: *

SUBMITTED: **

BASE STATE

PROJECT TITLE

DRAWING TITLE

SIGNATURES AFFIXED BELOW INDICATE OFFICIAL RECOMMENDATION AND APPROVAL OF ALL DRAWINGS IN THIS SET AS INDEXED ON THIS SHEET

APPROVAL RECOMMENDED: COE SIGNATURE
CHIEF, BRANCH

APPROVED: COE SIGNATURE
CHIEF, ENGINEERING DIVISION

DATE: COE SUPPLIED

PREPARED UNDER THE DIRECTION OF

COE SIGNATURE
COL., CORPS OF ENGINEERS, U. S. A. DISTRICT ENGINEER

SCALE:

SPEC. No.

SHEET G-1
1 OF 19

FILE No.

* FIRST INITIAL AND LAST NAME OF DESIGN PERSONNEL
** SIGNED BY PRINCIPAL OF A-E'S FIRM UNDER CONTRACT TO CESPK

Plate #1

TITLE BLOCK
(OTHER THAN COVER SHEET)

A-E FIRM'S PRINCIPAL'S STAMP

CORPS OF ENGINEERS' INITIALS
DESIGNER'S INITIALS

REVISION	DATE	DESCRIPTION	BY	BY
1	25 JAN 88	CHANGED LOCATION OF LOUVERED DOOR	J.N.	C.S.

NAME AND ADDRESS OF A-E FIRM UNDER CONTRACT TO CESPK

DEPARTMENT OF THE ARMY
SACRAMENTO DISTRICT, CORPS OF ENGINEERS
SACRAMENTO, CALIFORNIA

DESIGNED: *

DRAWN: *

CHECKED: *

BASE STATE

PROJECT TITLE
DRAWING TITLE

DISCIPLINE NUMBERING SYSTEM

CONSECUTIVE NUMBERING SYSTEM

SUBMITTED: * *

DATE APPROVED
DATE WILL BE ADDED LATER BY COE

SCALE

SPEC. No.

SHEET A-4
9 OF 19

FILE No.

* FIRST INITIAL AND LAST NAME OF DESIGN PERSONNEL
** SIGNED BY PRINCIPAL OF A-E'S FIRM UNDER CONTRACT TO CESPK

SAMPLE TITLE BLOCK

(COE PREPARED TOPOGRAPHY
OR LOGS OF BORINGS SHEET)

ACTUAL PROJECT FILE NUMBER GOES HERE

REVISION	DATE	DESCRIPTION	BY	BY

GEOTECHNICAL BRANCH

DEPARTMENT OF THE ARMY
SACRAMENTO DISTRICT, CORPS OF ENGINEERS
SACRAMENTO, CALIFORNIA

GEORGE AIR FORCE BASE CALIFORNIA
RESOURCE MANAGEMENT FACILITY
FY-87
LOCATIONS OF BORINGS

DESIGNED: R.L.T.
DRAWN: R.L.T., R.A.W.
CHECKED: MDR
SUBMITTED: Charles E. Stanger
CHIEF, SOILS DESIGN SECTION
DATE APPROVED: 9/4/85
SCALE:
SHEET C-6 8 OF 87
FILE No. 230-25-207
SPEC. No. 7008

REFERENCE: SACRAMENTO DISTRICT EXPLORATION LOG FILE NUMBER 230-01-237

OR: REFERENCE: SACRAMENTO DISTRICT TOPOGRAPHY FILE NUMBER

WHEN TOPOGRAPHY OR LOGS OF BORINGS DRAWINGS ARE SUPPLIED BY THE COE PLACE REFERENCE TO COE LOG OF BORING OR TOPOGRAPHY FILE NUMBER HERE

SAMPLE TITLE BLOCK

(SITE ADAPTATION COVER SHEET)

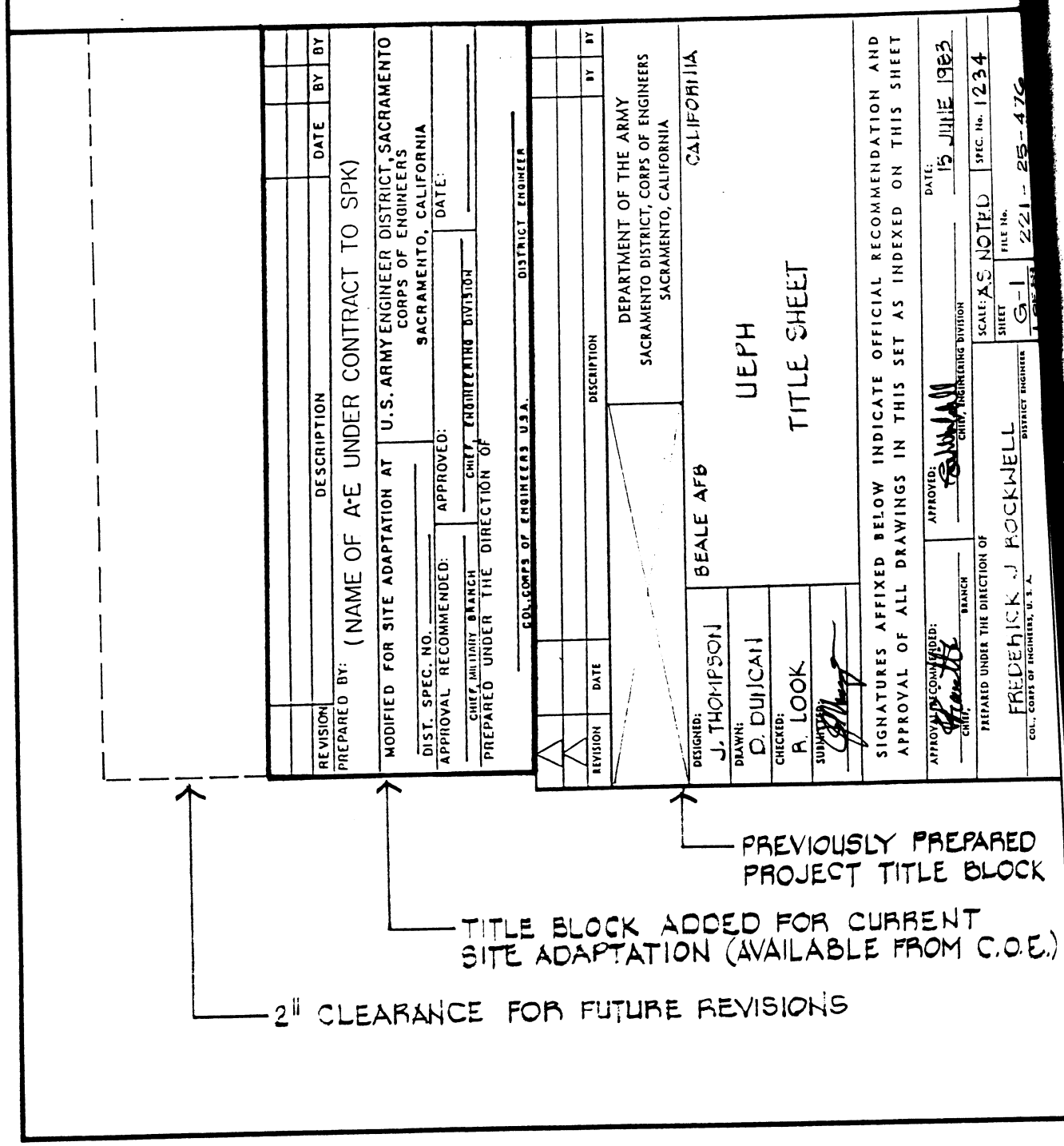

SAMPLE TITLE BLOCK

(SITE ADAPTATION OTHER THAN COVER SHEET)

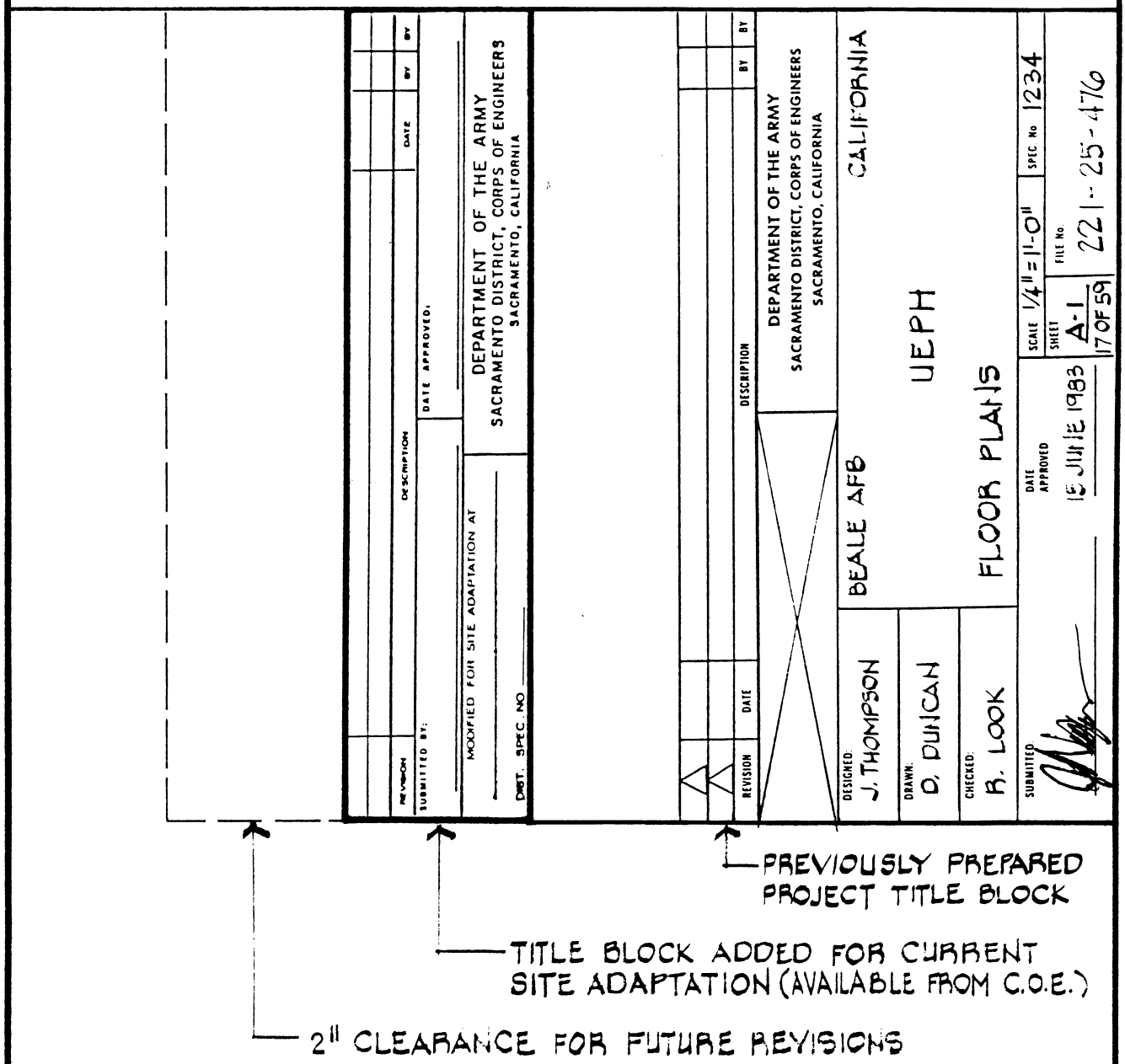

SAMPLE SCHEDULE of DRAWINGS

CONSECUTIVE SHEET NO.	DISCIPLINE SHEET NO.	DRAWING TITLE
1 of 19	G-1	PROJECT TITLE, PROJECT NUMBER, VICINITY MAP, LOCATION PLAN & SCHED. OF DWGS
2 of 19	G-2	LIST OF ABBREVIATIONS
3 of 19	C-1	GRADING PLAN & BUILDING LAYOUT & LEGEND
4 of 19	U-1	UTILITIES (if not shown on CIVIL Sheets)
5 of 19	L-1	LANDSCAPE PLAN & LEGEND
6 of 19	A-1	FLOOR PLAN, LEGEND, FINISH AND DOOR SCHED.
7 of 19	A-2	ELEVATIONS
8 of 19	A-3	BUILDING SECTIONS
9 of 19	A-4	ROOF PLAN, REFLECTED CEILING PLAN & DETAILS
10 of 19	S-1	FOUND. PLAN, FIRST FLR. FRAMING PLAN & LEGEND
11 of 19	S-2	ROOF FRAMING PLAN
12 of 19	S-3	WALL FRAMING & MISC. DETAILS
13 of 19	P-1	PLUMBING PLAN AND LEGEND
14 of 19	M-1	MECHANICAL PLAN AND LEGEND
15 of 19	M-2	EQUIPMENT SCHEDULES & DETAILS
16 of 19	FP-1	FIRE PROTECTION PLAN
17 of 19	E-1	SITE PLAN & LEGEND
18 of 19	E-2	FLOOR PLAN & PANEL SCHEDULE
19 of 19	E-3	RISER DIAGRAMS & DETAILS

NOTE TO DESIGNER: ALL SCHEDULES OF DRAWINGS PREPARED FOR, AND BY, THE SACRAMENTO DISTRICT OFFICE SHALL BE IN THIS FORMAT AND THE SEQUENCE OF DISCIPLINES SHALL FOLLOW THE ORDER INDICATED. PROVIDE AS MANY DRAWINGS WITHIN EACH DISCIPLINE AS NECESSARY TO COMPLETELY DESCRIBE THE PROJECT. IF YOU HAVE ANY QUESTIONS, PLEASE CONTACT THE CHIEF, DESIGN QUALITY ASSURANCE SECTION ARMY/AIR FORCE, AS APPROPRIATE, THROUGH YOUR CORPS OF ENGINEERS PROJECT MANAGER. SEE CHAPTER II FOR FURTHER DISCUSSION.

SAMPLE GRAPHIC SCALES

GRAPHIC SCALES

(ENGINEERING)

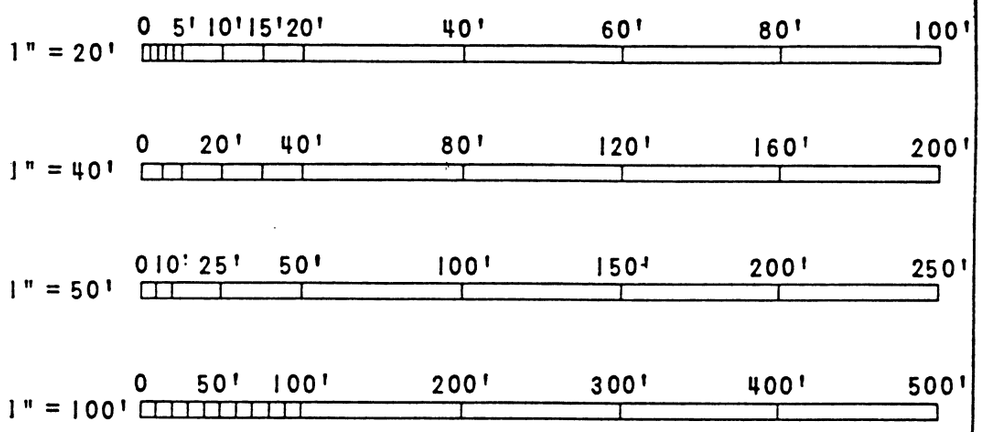

GRAPHIC SCALES

(ARCHITECTURAL)

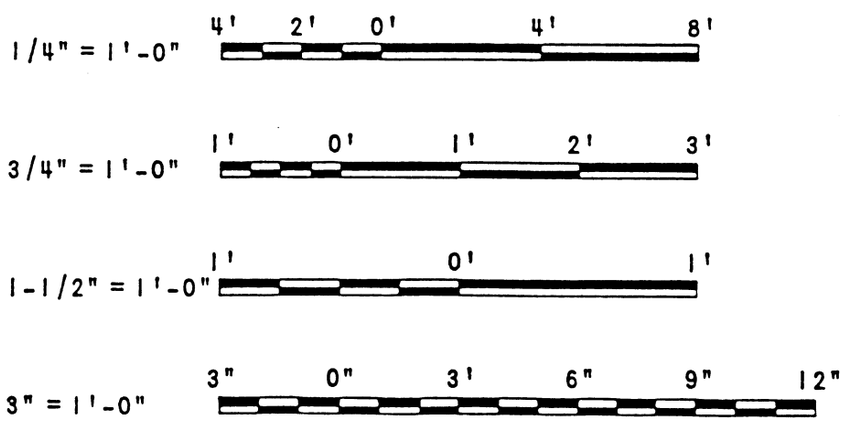

DOOR SCHEDULE

NO.	TYPE	SIZE	MAT.	TYPE*	FIN.	RATING	FRAME**					H.W.	REMARKS
							MAT.	GAGE	HEAD	JAMB	SILL		
1	F	3'-0" x 7'-0" x 1¾"	STL	XH	PAINT	¾ HR	STL	16	6	6	12	1	
2	V	3'-0" x 7'-0" x 1¾"	WD S.C.	-	PAINT	-	STL	16	5	5	13	2	
3	FG	3'-0" x 7'-0" x 1¾"	ALUM	-	PAINT	-	ALUM	-	4	2	10	4	TEMPERED GLASS
4	L	2'-6" x 7'-0" x 1¾"	WD H.C.	-	STAIN	-	STL	18	7	7	-	2	
5	2F	2-3'-0" x 7'-0" x 1¾"	STL	HVY	PAINT	20 MIN.	STL	16	8	9	14	6	

* APPLIES TO STEEL DOORS
STANDARD = STD, HEAVY = HVY,
EXTRA HEAVY = XH

** SEE DWG____ FOR DETAILS

DOOR TYPES

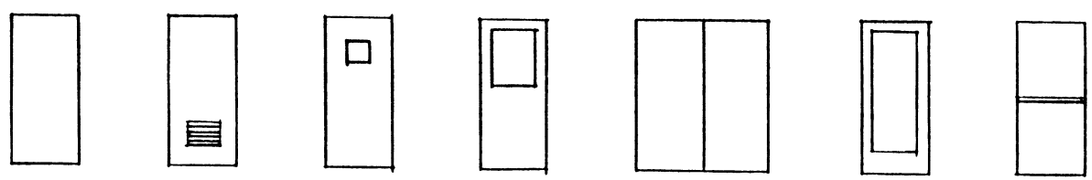

F L V G 2F FG D

NOTE: ALL DOOR TYPES SHALL UTILIZE STEEL DOOR INSTITUTE STANDARD DOOR TYPE NOMENCLATURE. FOR SPECIAL DOORS USE OWN NOMENCLATURE WITH EXPLANATION.

SAMPLE DOOR SCHEDULE

SAMPLE WINDOW TYPES

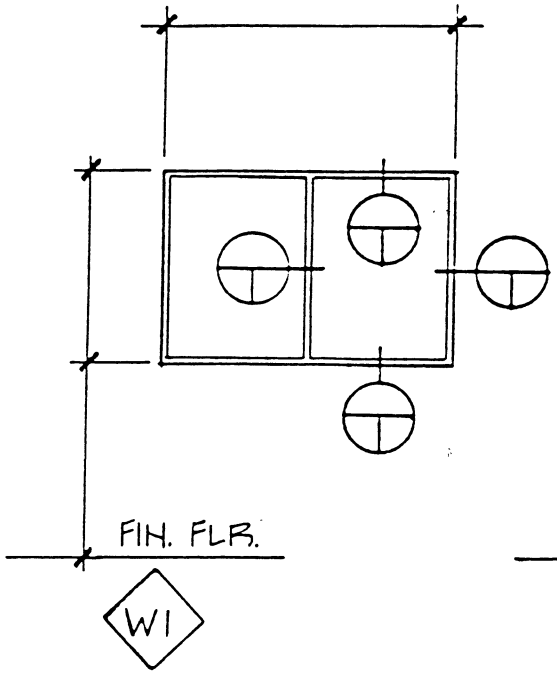

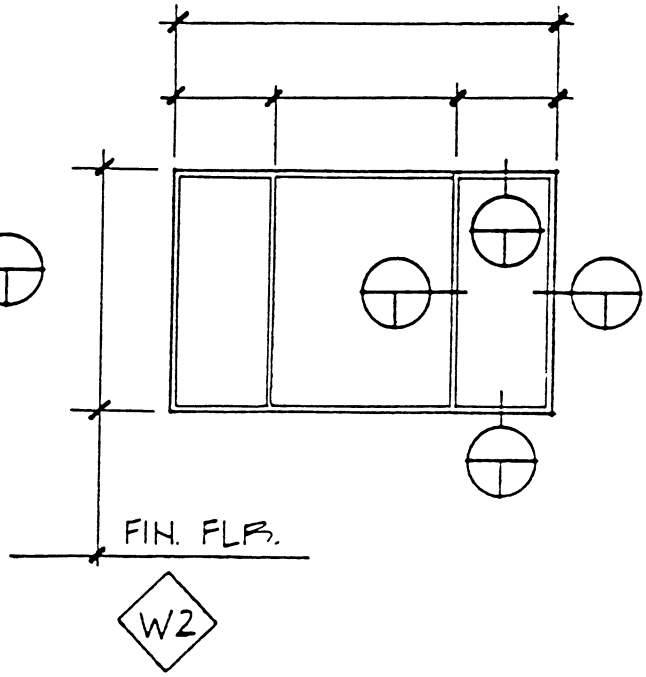

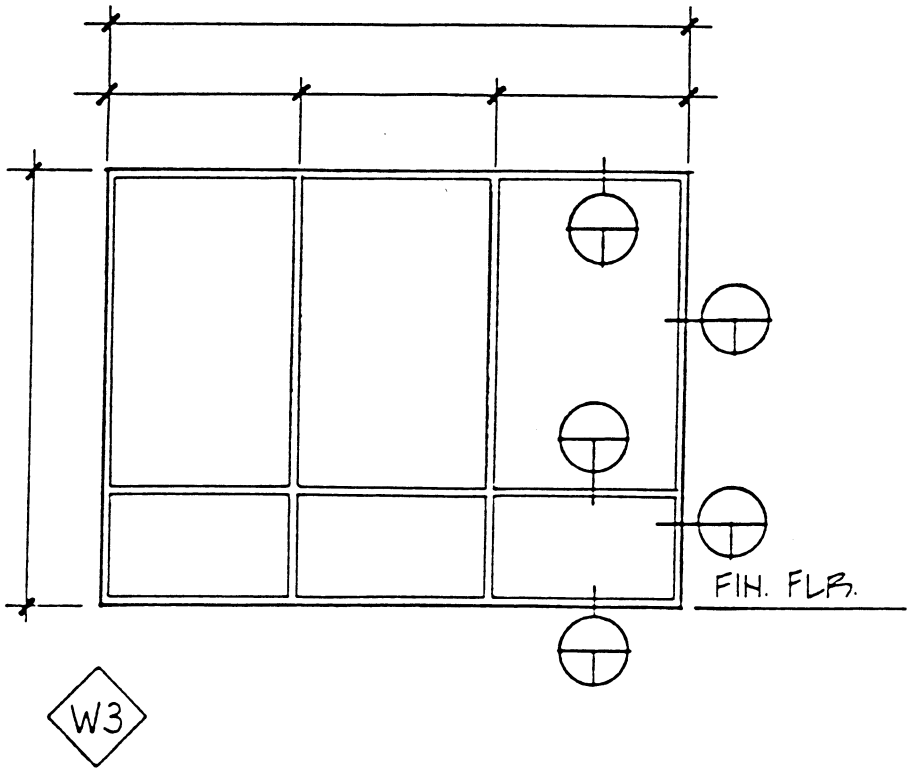

FINISH SCHEDULE, FINISH LEGEND AND INTERIOR COLOR SCHEME INSTRUCTIONS

DIRECTIONS FOR USE OF THE INTERIOR FINISH SCHEDULE AND COLOR FINISH LEGEND

A. The Interior Finish Schedule shall be used in conjunction with the Color Finish Legend. The format shown shall be followed but is not meant to be restrictive. If the complexity of the project differs from what is illustrated, then columns of information may be added or deleted as appropriate.

B. Abbreviations used shall be as shown. Additions to this list are acceptable depending on additional finishes used within a project.

AC:	ACOUSTICAL CEILING	P:	PAINT
AWC:	ACOUSTICAL WALL COVERING	PLAM:	PLASTIC LAMINATE
B:	BASE	QT:	QUARRY TILE
C:	CARPET	RB:	RESILIENT BASE
CMU:	CONCRETE MASONRY UNIT	S:	STAIN
CONC:	CONCRETE	SV:	SHEET VINYL
CT:	CERAMIC TILE	SWC:	SYNTHETIC WALL COVERING
EXP:	EXPOSED	VCT:	VINYL COMPOSITION TILE
FWC:	FABRIC WALL COVERING	VWC:	VINYL WALL COVERING
G:	GROUT	WF:	WOOD FLOORING
GWB:	GYPSUM WALLBOARD	X:	NO FINISH

C. The abbreviations are used to specify the material, manufacturer, pattern reference and color reference for the item. This information shall be provided as the Color Finish Legend. Items, such as carpet tile and broadloom designations, shall be distinguished under the Color Finish Legend.

D. All blank spaces on the Interior Finish Schedule shall be filled with the abbreviations provided and shall be referenced in the Color Finish Legend including all multiple listings of finishes used, i.e. CT1; XYZ Inc, X12, Dove Grey 1234, CT2; XYZ Inc, X17, Rose Dust 5678.

E. Wainscot shall be indicated by listing both the wall finish above the wainscot and the wainscot material within the appropriate schedule box, i.e. P1/CT2.

F. Surface receiving a paint finish requires an abbreviation of the material receiving the application. List within the appropriate box, i.e. P1-GWB.

G. The column labeled as Trim shall be used for Door and Window Frame, Chair Rail notations, etc.

H. The column listed as Misc. shall be used to specify the placement of miscellaneous items such as Plastic Laminate, Toilet Partitions, Grout Color etc. that do not otherwise relate to one of the other columns in the schedule. Also note detail sheets if applicable.

I. The column listed as Remarks shall be used for notating any information that needs clarification, i.e. chair rail, door, window frames, or metal roof deck finish.

J. Provided on the following page is an example of the Interior Finish Schedule and Color Finish Legend as required. NOTE: A DOT MATRIX IS NOT ACCEPTABLE.

K. The Designer shall use this format when submitting a Interior Finish Schedule and Color Finish Legend for review. Alterations are subject to approval from Sacramento District Design Quality Assurance (DQA).

L. Provide a list of all the different color schemes and list all room numbers in their appropriate scheme. i.e. Scheme 1: Room #101, #108, etc.

SAMPLE FINISH SCHEDULE, FINISH LEGEND AND INTERIOR COLOR SCHEME

INTERIOR FINISH SCHEDULE

RM NO	ROOM NAME	FLOOR	BASE	WALLS				CEILING		TRIM	MISC	REMARKS
				N	E	S	W	MAT'L	HT			
100	VEST	QT1	B2	VWC1	VWC1	VWC1	VWC1	P1-GWB	8-0	P2		P2-FRAME
101	CORR	C1	RB1	VWC1	VWC1	VWC1	VWC1	AC 1	8-0	P2		
102	COMMAND	C2	RB1	SWC1	SWC1	SWC1	SWC1	AC 1	8-0	P2		
103	PVT TLT	CT1	B1	VWC2	CT2/VWC2	VWC2	VWC2	P1-GWB	8-0	P2	G1	
104	ADMIN	C1	RB1	P1-GWB	P1-GWB	SWC1	P1-GWB	AC 1	9-0	P2		
105	BRK RM	VCT1	RB2	P2-GWB	P1-GWB	P1-GWB	P1-GWB	AC 1	9-0	P2	PLAM1	CHAIR RL
106	PHN RM	VCT1	RB2	EXP	EXP	EXP	EXP	EXP	VAR	P2		P2-RF DK
107	OFFICE	C2	RB2	P1-GWB	SWC1	SWC1	P1-GWB	AC 1	9-0	P2		
108	UTILITY	EXP	EXP	EXP	EXP	EXP	EXP	EXP	VAR	P2		P2-RF DK

NOTES:
Colors listed by manufacturers are for identification purposes only, and are not intended to limit selections to products by manufacturers indicated. An exact match for manufacturers' colors is not required. The selections serve only to indicate the color which the manufacturers' standard must approach.

COLOR FINISH LEGEND

AC: ACOUSTICAL CEILING
AC 1: Mfg, product #, color

B: BASE
B 1: Mfg, product #, color #1
B 2: Mfg, product #, color #2

C: CARPET
C 1: Mfg, product #, color #1
C 2: Mfg, product #, color #2

CT: CERAMIC TILE
CT 1: Mfg, product #, color #1
CT 2: Mfg, product #, color #2

EXP: EXPOSED

G: GROUT
G 1: Mfg, product #, color

PLAM: PLASTIC LAMINATE
PLAM 1: Mfg, product #, color

P: PAINT
P 1: Mfg, product #, color #1
P 2: Mfg, product #, color #2

QT: QUARRY TILE
QT 1: Mfg, product #, color

RB: RESILIENT BASE
RB 1: Mfg, product #, color #1
RB 2: Mfg, product #, color #2

SWC: SYNTHETIC WALL COVERING
SWC 1: Mfg, product #, color

VCT: VINYL COMPOSITION TILE
VCT 1: Mfg, product #, color

VWC: VINYL WALL COVERING
VWC 1: Mfg, product #, color #1
VWC 2: Mfg, product #, color #2

COLOR SCHEMES

Scheme 1: Room #101, #108
Scheme 2: Room #102
Scheme 3: Room #103, #107
Scheme 4: Room #104
Scheme 5: Room #105, #106

EXAMPLE FLOOR PLAN

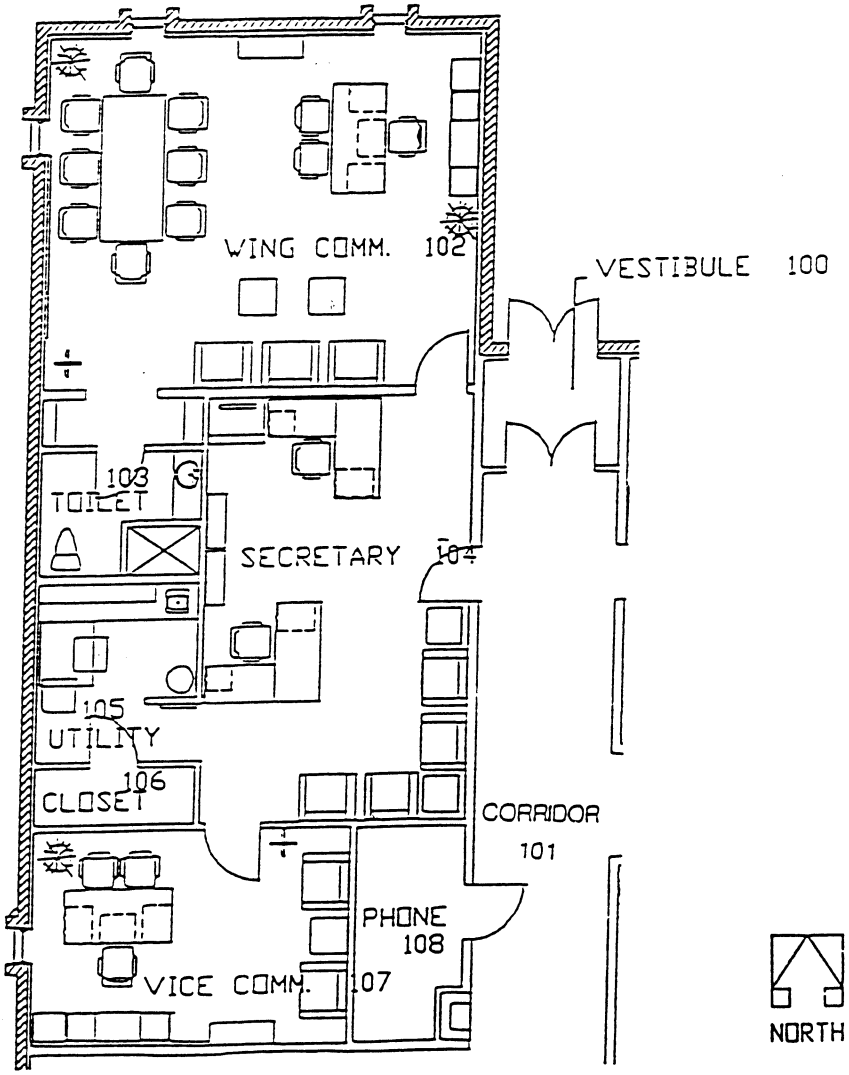

See Interior Finish Schedule and Color Finish Legend on previous pages for example of application.

SAMPLE EXTERIOR COLOR SCHEDULE

EXTERIOR COLOR SCHEDULE					
WALLS	PILASTERS	SOFFITS	DOORS	RAILINGS	STOREFRONT FRAMING
CONCRETE MASONRY UNITS 34410 LIGHT GREEN	CONCRETE 34424 GRAY GREEN	STUCCO 34554 LIGHT - YELLOW - GREEN	STEEL 30252 LIGHT TAN - RED	STEEL 30109 DEEP TAN	ALUM MEDIUM BRONZE

NOTES:

GRAVEL STOPS, DOWNSPOUTS, LEADERS, LOUVERS, CAP FLASHING: 34410 (LIGHT GREEN)
STEEL DOOR FRAMES: 34412 (MEDIUM GREEN)
OTHER MISC. FERROUS METAL: 34554 (LIGHT YELLOW GREEN)
INSUL. WALL PANELS: 20227 (MEDIUM BROWN)

EXCEPT AS OTHERWISE DESIGNATED, COLORS ARE DESIGNATED BY FEDERAL STANDARD 595 AND ARE FOR COLOR ONLY. GLOSS SHALL BE DETERMINED FROM APPROPRIATE SPECIFIED MATERIAL PUBLICATION. COLORS LISTED BY MANUFACTURERS ARE FOR IDENTIFICATION PURPOSES ONLY, AND ARE NOT INTENDED TO LIMIT SELECTIONS TO PRODUCTS OF THE MANUFACTURERS INDICATED. AN EXACT MATCH FOR MANUFACTURERS COLORS IS NOT REQUIRED; THE SELECTIONS SERVE ONLY TO INDICATE THE COLOR WHICH THE MANUFACTURERS STANDARD MUST APPROACH.

SAMPLE VICINITY MAP

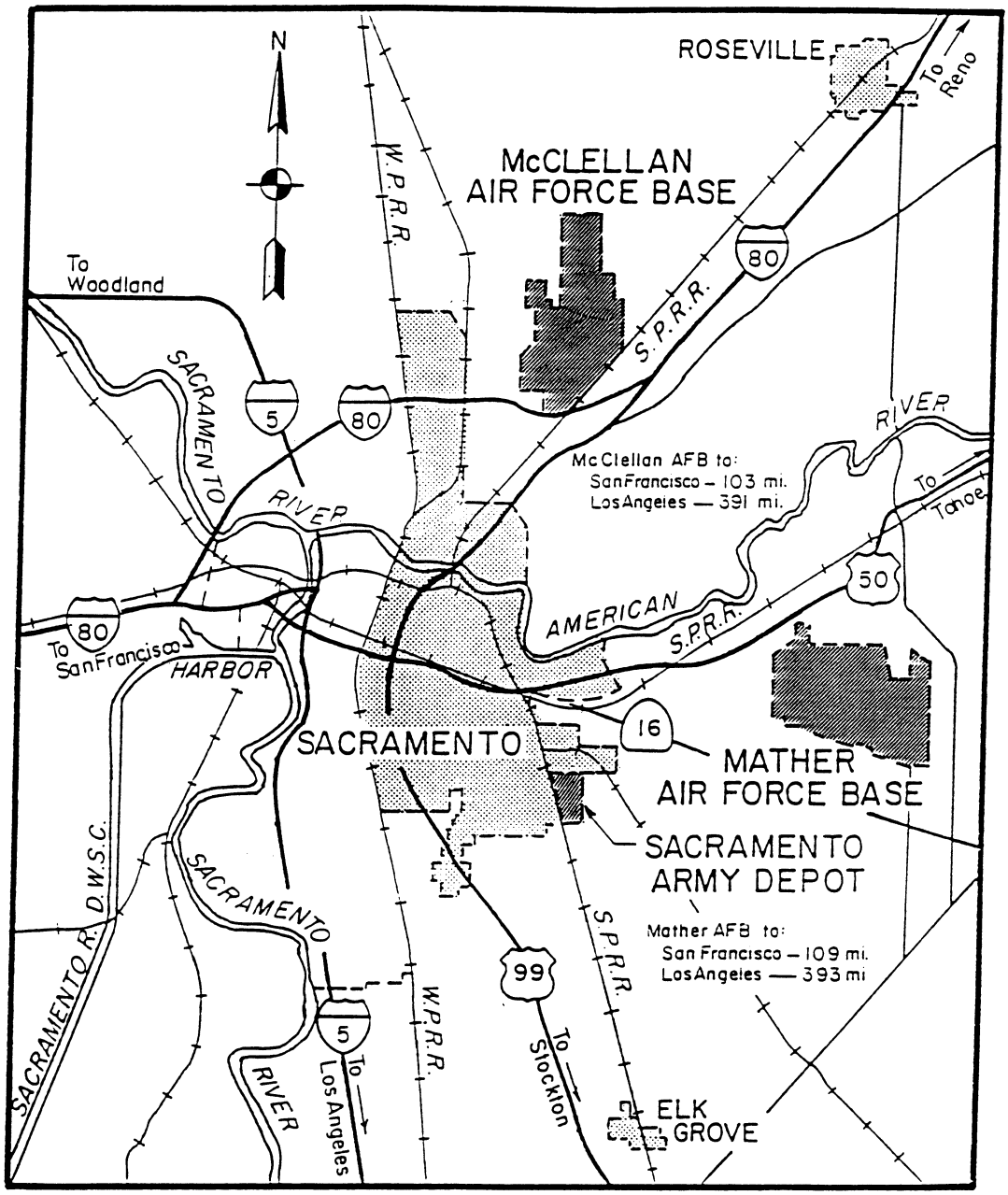

VICINITY MAP

SCALE IN MILES

0 1 2 3 4 5

NOTE TO DESIGNER: SEE APPENDIX J FOR ACTUAL VICINITY MAPS FOR THE VARIOUS AIR FORCE INSTALLATIONS SERVED BY THE SACRAMENTO DISTRICT OF THE CORPS OF ENGINEERS.

SAMPLE PROJECT LOCATION MAP

PROJECT LOCATION MAP

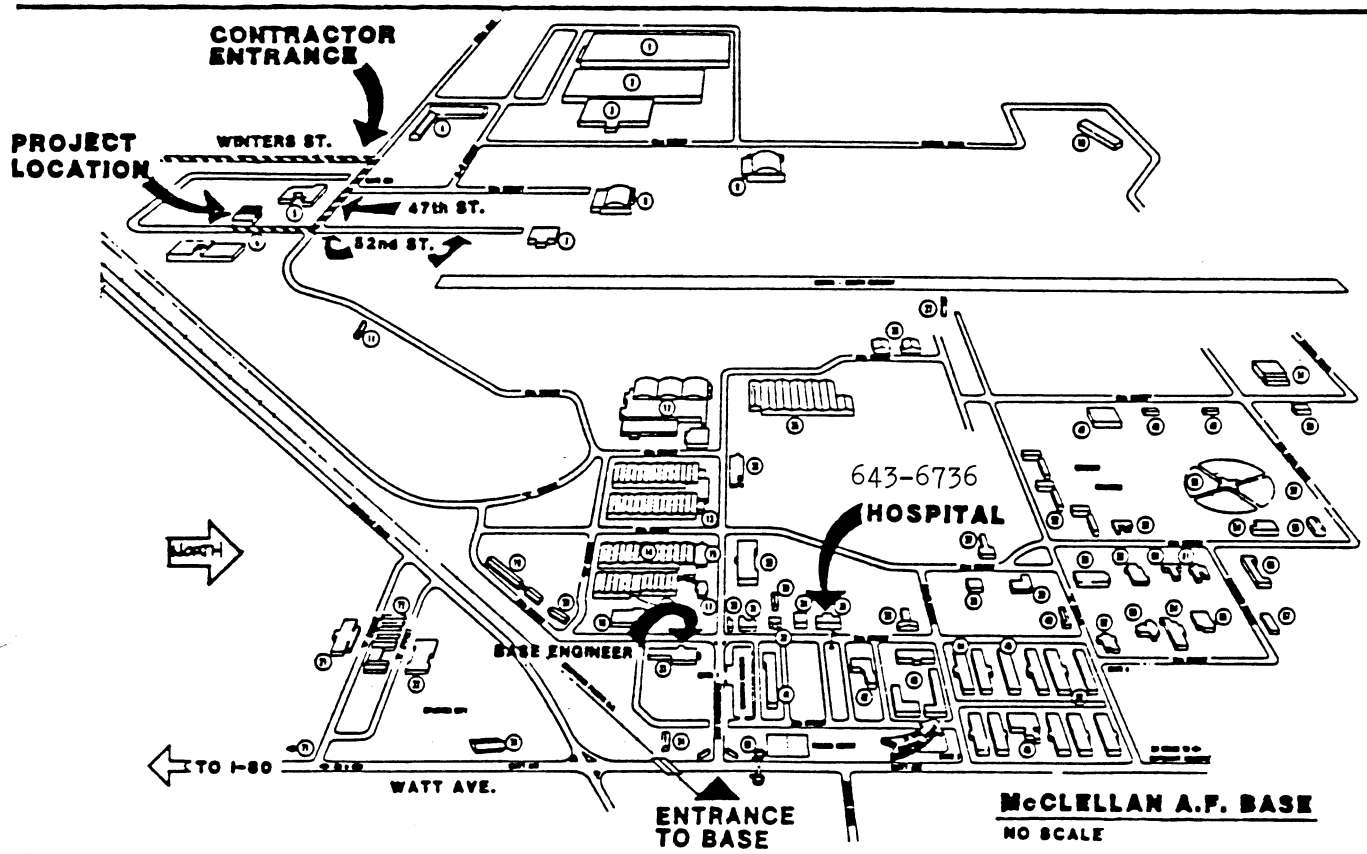

CONTRACTOR ACCESS NOTES

1. CONTRACTORS ACCESS TO SITE VIA WINTERS ST. FROM US 860 USE GATE 0600 & PROCEED EAST ON 47TH ST. TO 52ND ST. TURN RIGHT ONTO 52ND ST. & PROCEED TO BLDG. SITE
2. CLEARANCE REQ'D FOR ACCESS TO BASE BY ARMY CORPS OF ENGINEERS
3. TRASH HANDLING SYSTEM NOT AVAILABLE TO CONTRACTOR DISPOSAL REQ'D OFF BASE IN ACCORDANCE W/ LOCAL CODES.
4. BORROW & DISPOSAL AREAS NOT AVAILABLE ON BASE TO THE CONTRACTOR. REQ'D DISPOSAL WILL OCCUR OFF BASE IN ACCORDANCE W/LOCAL CODES.
5. CONTRACTOR EQUIPMENT & MATERIAL STORAGE AREA AVAILABLE NEXT TO SITE. NO COVERED STORAGE AVAILABLE. CONTRACTOR RESPONSIBLE FOR SECURITY THEREOF.
6. UTILITIES AVAILABLE TO CONTRACTOR: ELECTRIC POWER AND WATER. COST COORDINATED W/ARMY CORPS OF ENGINEERS.

SHOW THE FOLLOWING LOCATIONS FOR AIR FORCE PROJECTS.

1. CORPS RESIDENT OFFICE
2. CONTRACTOR ENTRANCE
3. BASE CIVIL ENGR OFFICE
4. SECURITY POLICE OFFICE
5. BASE MEDICAL FACILITY/HOSPITAL (Ph.#)
6. CONTRACTOR EQUIPT YARD
7. BORROW AND DISPOSAL AREA

(IF THERE IS NO BORROW OR DISPOSAL AREA ON THE FACILITY PROVIDE A NOTE TO THAT EFFECT)

8. HAUL ROUTE HIGHLIGHT HAUL ROUTE

DRAWING REDUCED

US Army Corps of Engineers
Sacramento District

PHYSICALLY HANDICAPPED CHECKLIST

PROJECT: _____

INSTALLATION: _____ FY: _____ PN: _____

SPECIFICATION NO.: _____

	ASSIGNED PERSONNEL		VISITORS	
	MEN	WOMEN	MEN	WOMEN
NON-AMBULATORY: wheelchairs				
SEMI-AMBULATORY: braces or crutches, amputees, arthitics, spastics, pulmonary or cardiac ills				
MANUAL: loss of upper extremities				
VISUAL: total or near total blindness				
AUDITORY:				
COORDINATION: faulty or palsy from brain, spinal, or peripheral nerve injury				

(Fill in only "YES" or "NO" in each of the above boxes)

_____ PROJECT MANAGER

_____ DATE

US Army Corps of Engineers
Sacramento District

ENVIRONMENTAL PERMITS STATUS MATRIX

PROJECT _____

INSTALLATION _____ FY: _____ PN: _____

COMPLETED AT ____ 30% ____ 60% PRELIMINARY DESIGN.

TYPE OF PERMIT	PERMITTING ACTION: REQ'D Y/N	PERMITTING ACTION: QTY	PERMITTING ACTION: TIME REQ'D FOR PERMIT (DAYS) PREP	PERMITTING ACTION: TIME REQ'D FOR PERMIT (DAYS) APP	PERMIT SPECIFICALLY FOR:	LOCAL JURISDICTION CONTACTED AND DATE	PERMIT FEE
AIR QUALITY							
WATER QUALITY							
SOLID WASTE							
HAZARDOUS WASTE 1.							
OTHER 2.							

1. INCLUDES UNDERGROUND TANK PERMITS FOR FUELS AND OTHER HAZARDOUS MATERIALS.
2. OTHER REQUIREMENTS MIGHT INCLUDE: ARCHEOLOGICAL/CULTURAL RESOURCE CLEARANCE, SHPO COODINATION, FAA COORDINATION, AND ETC..

NOTE: SEE APPENDIX C FOR SPECIFIC INSTRUCTIONS FOR COMPLETING THIS FORM.

INSTRUCTIONS FOR COMPLETING

GROSS AREA TAKEOFF

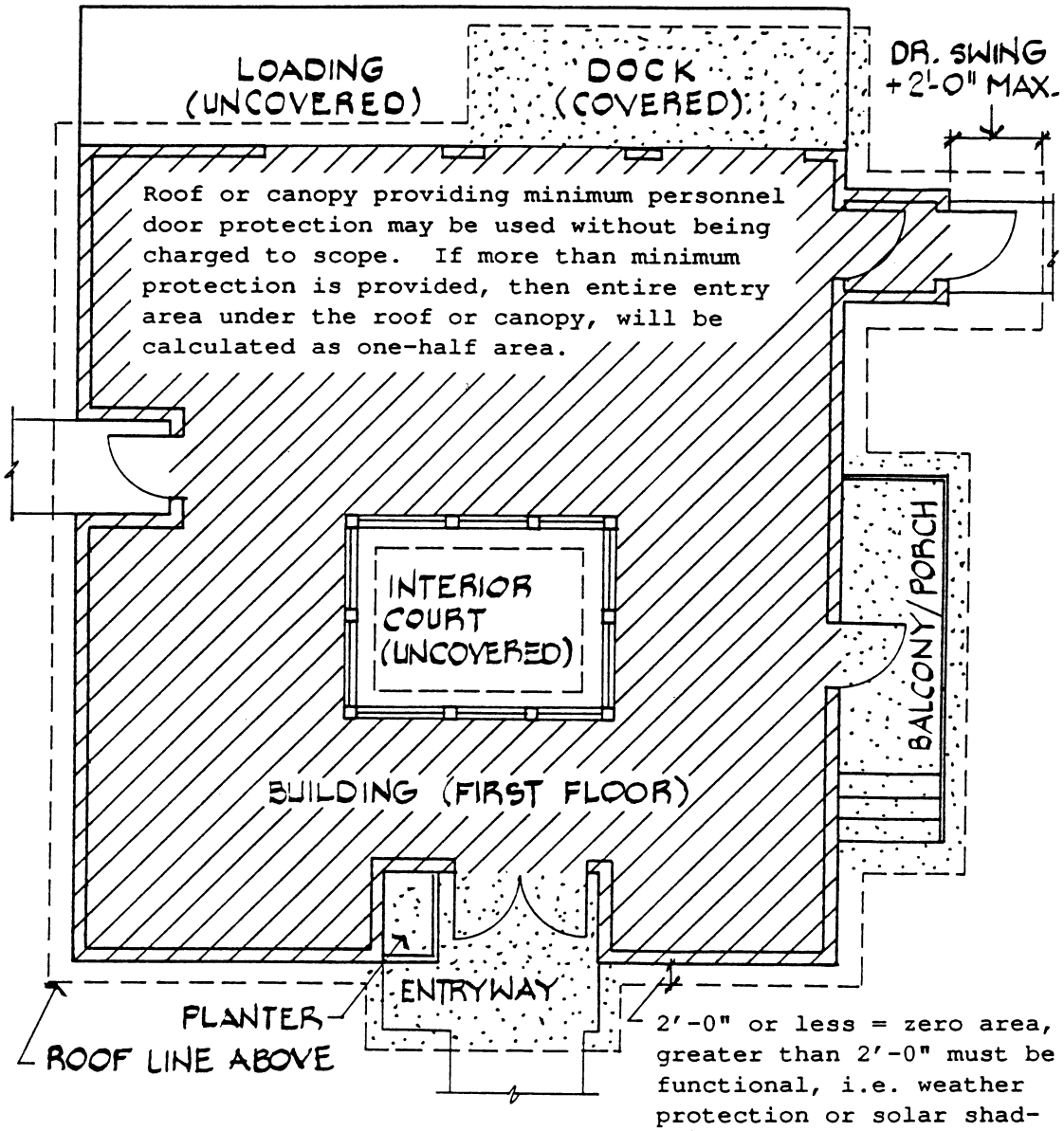

2'-0" or less = zero area, greater than 2'-0" must be functional, i.e. weather protection or solar shading, or be calculated at one-half area of entire overhang.

LEGEND

- FULL AREA
- HALF AREA
- ZERO AREA

First Floor	_____S.F.
1/2 Cov. Load. Dock	_____S.F.
1/2 Cov. Balcony	_____S.F.
1/2 cov. Entryway	_____S.F.
Total Gross Area	_____S.F.

SAMPLE DOCUMENT COVER SHEET

(Use for all 8½"x11" bound documents. i.e. Design Analysis, Specifications, etc.)

US Army Corps of Engineers
Sacramento District

COVER SHEET for AIR FORCE PROJECTS

DATE _____

NOTE: All cover sheets shall follow the format below. All entries must be completed by the designer or the project will be returned. A blank is provided as Plate 18 for the A-E's use.

INSTALLATION: Indian Springs AFAF, Nellis A.F.B., Nevada

JOB TITLE: Control Tower
FY 87

PROJECT NUMBER: 73020

DOCUMENT DESCRIPTION: Design Analysis

SACRAMENTO DISTRICT:

DRAWING FILE NUMBER: 229-11*-307

SPECIFICATION NUMBER: 7361

NUMBER OF SHEETS TOTAL: 0 thru 350

NUMBER OF SHEETS BY VOLUME.

VOL. 1 _____

VOL. 2 _____

VOL. 3 _____

REMARKS: Project Manager: Mr. Jerry Piering
AFRCE WR Project Manager: Mr. Ron Mc Robbie
A-E NAC ABKJ

*Note: 01 is used for Log of Borings
11 is used for Design Analysis and Cost Estimate
13 is used for Topo Drawings
25 is used for all other support documents

US Army Corps
of Engineers
Sacramento District

COVER SHEET
for
AIR FORCE PROJECTS

DATE _____

INSTALLATION: _____

JOB TITLE: _____

_____

_____

PROJECT NUMBER: _____

DOCUMENT DESCRIPTION: _____

SACRAMENTO DISTRICT:

DRAWING FILE NUMBER: _____

SPECIFICATION NUMBER: _____

NUMBER OF SHEETS TOTAL: _____

NUMBER OF SHEETS BY VOLUME.

VOL. 1 _____

VOL. 2 _____

VOL. 3 _____

REMARKS: _____

_____

_____

AIR CONDITIONING LOAD ESTIMATE

DATE	BASE	ESTIMATOR	PAGE OF PAGES

BUILDING NO.	SPACE NO.	SPACE USE	AREA SF	DAILY OPERATION HR

DAILY RANGE F | ELEV FT | LAT °

ESTIMATE FOR ☐ PEAK LOAD ☐ PARTIAL LOAD | SUN TIME HR

CONDITIONS	DB	WB	% RH	DP	GR PER LB
OUTSIDE					
ROOM					
DIFFERENCE		XXX	XXX	XXX	

SELECTED ROOM CONDITIONS DB WB % RH

ITEM	QUANTITY	GAIN	FACTOR	BTU/HR
SOLAR GAIN GLASS				
GLASS	SF X	X		
GLASS	SF X	X		
GLASS	SF X	X		
GLASS	SF X	X		
SOLAR & TRANS-WALLS & ROOF				
WALL	SF X	X		
WALL	SF X	X		
WALL	SF X	X		
WALL	SF X	X		
ROOF	SF X	X		
TRANSMISSION GAIN-OTHER				
ALL GLASS	SF X	FX		
PARTITION	SF X	FX		
CEILING	SF X	FX		
FLOOR	SF X	FX		
O.A. INFIL	CFM X	FX 1.08		
INTERNAL HEAT				
PEOPLE		X		
POWER		X		
LIGHTS	WATTS X 3.4	X		
		SEN. HT. SUBTOTAL		
STORAGE CREDIT – SEE NOTE _____				
ROOM SENSIBLE HEAT ■				
SUPPLY DUCT HEAT GAIN	% + SUPPLY DUCT LEAKAGE	% + SUPPLY FAN H.P	%	
O.A.	CFM X	FX	B.F. X 1.08	
EQUIVALENT SENSIBLE HEAT ▶				
LATENT HEAT				
INFILTRATION	CFM X	G/LB X 0.68		
PEOPLE		X		
VAPOR TRANSMISSION – SEE NOTE				
ROOM LATENT HEAT				
SUPPLY DUCT LEAKAGE GAIN		%		
O.A.	CFM X	G/LB X	B.F. X 0.68	
EQUIVALENT LATENT HEAT				
EQUIVALENT TOTAL HEAT ▶▶				
O. A. HEAT				
SEN.	CFM X	FX (1-	BF) X 1.08	
LAT.	CFM X	G/LB X (1-	BF) X 0.68	
RETURN DUCT HEAT GAIN	% + RETURN DUCT AIR GAIN	% + RETURN/SUPPLY FAN H.P.	%	
COOLING COIL GRAND TOTAL HEAT				
PUMP H.P.	% + PIPING HEAT GAIN	%		
REF EQUIPMENT GRAND TOTAL HEAT				

OUTSIDE AIR

VENTILATION REQ'D	SMOKING PERMITTED	PEOPLE X	CFM/PERSON =
	SMOKING NOT PERMITTED	PEOPLE X	CFM/PERSON =
	AREA	SF X	CFM/SF =
			REQ'D CFM
INFILTRATION	CRACK	FT X	CFM/FT =
	DOORS	# X	CFM/DOOR =
			=
			TOTAL CFM
EXH FAN			=
			=
			CFM

TOTAL O.A. THRU COOLING COIL = _____ CFM

Coordination of cooling design and heating design is essential and a study of the heating estimate should be made at this time.

APPARATUS DEWPOINT TEMPERATURE

ESHF = ▶ EQUIV SEN HT / ▶▶ EQUIV TOTAL HT = 0.____

INDICATED ADP = ___ F. SELECTED ADP = ___ F

COIL AIR QUANTITY

SYSTEM ΔT = (1- BF) (TRM F-TADP F) = ___ F

CFM = ▶ EQUIV SEN HT / 1.08 X F SELECTED ΔT = _____

ROOM SUPPLY AIR

■ ROOM SEN HEAT / 1.08 X F SELECTED ROOM ΔT = _____ CFM

REHEAT REQ'D _____ BTU/HR - SEE NOTE _____

NOTES (REF AFM 88-15, ATCH 13)

SUMMARY			CHECK FIGURES		
S.A.	=	CFM	SF/TON	=	SF/TN
O.A.	=	CFM	S.A/SF	=	CFM/SF
EXH AIR	=	CFM	O.A./S.A.	=	%
REF EQUIP	=	TONS			

AF FORM JUN 73 108 PREVIOUS EDITION WILL BE USED.

AIR CONDITIONING LOAD ESTIMATE

DATE	BASE	ESTIMATOR	PAGE 1 OF 1 PAGES
14 Aug 87	NAFB	RRS	

BUILDING NO.	SPACE NO.	SPACE USE	AREA	DAILY OPERATION
		Airman Dining Hall	24,900 SF	16 HR

DAILY RANGE 38 F | ELEV 1156 FT | LAT 34

ESTIMATE FOR: [X] PEAK LOAD [ ] PARTIAL LOAD | SUN TIME 1800 HR

CONDITIONS	DB	WB	% RH	DP	GR PER LB
OUTSIDE	99	72	27	59	71
ROOM	78	65	50	56	72
DIFFERENCE	21	XXX	XXX	XXX	-1

SELECTED ROOM CONDITIONS 78 DB 65 WB 50 % RH

ITEM	QUANTITY	GAIN	FACTOR	BTU/HR	
SOLAR GAIN GLASS					
N GLASS	210 SF x	23 x	0.73	3	530
S GLASS	200 SF x	5 x	0.73		730
E GLASS	610 SF x	23 x	0.73	10	240
GLASS	SF x	x			
SOLAR & TRANS-WALLS & ROOF					
N WALL	1,180 SF x	8 x	0.15	1	420
S WALL	1,190 SF x	15 x	0.15	2	680
E WALL	830 SF x	11 x	0.15	1	370
W WALL	300 SF x	48 x	0.15	2	160
ROOF	24,900 SF x	35 x	0.05	43	580
TRANSMISSION GAIN-OTHER					
ALL GLASS	1020 SF x	18 F x	0.73	13	400
PARTITION	SF x	F x			
CEILING	SF x	F x			
FLOOR	SF x	F x			
O.A. INFIL	CFM x	F x 1.08			
INTERNAL HEAT					
PEOPLE	426	x 215		91	590
POWER	49,800X .2	x 3.4		33	860
LIGHTS	49,800	WATTS x 3.4 x	1.25X.5	105	830
Equipment				100	000
SEN. HT. SUBTOTAL					
STORAGE CREDIT - SEE NOTE					
ROOM SENSIBLE HEAT ■				410	390
SUPPLY DUCT HEAT GAIN 2 % + SUPPLY DUCT LEAKAGE 5 % + SUPPLY FAN H.P 3 %				41	040
O.A. 213 CFM x	18 F x	.2 B.F. x 1.08		8	280
EQUIVALENT SENSIBLE HEAT ▶				459	710
LATENT HEAT					
INFILTRATION	CFM x	G/LB x 0.68			
PEOPLE	426	x 235		100	110
VAPOR TRANSMISSION - SEE NOTE					
Equip ~~ROOM~~ LATENT HEAT				20	000
SUPPLY DUCT LEAKAGE GAIN	10 %			12	000
O.A. 2130 CFM x	-1 G/LB x	.2 B.F. x 0.68			0
EQUIVALENT LATENT HEAT				132	110
EQUIVALENT TOTAL HEAT ▶▶				591	820
O. A. HEAT					
SEN. 2130 CFM x	18 F x (1- .2 BF) x 1.08			33	130
LAT. 2130 CFM x	-1 G/LB x (1- .2 BF) x 0.68				0
RETURN DUCT HEAT GAIN 3 % + RETURN DUCT AIR GAIN 3 % + RETURN/SUPPLY FAN H.P. 4 %				59	180
COOLING COIL GRAND TOTAL HEAT				684	130
PUMP H.P. % + PIPING HEAT GAIN 3 %				20	500
REF EQUIPMENT GRAND TOTAL HEAT				704	630

OUTSIDE AIR

VENTILATION REQ'D

SMOKING PERMITTED	PEOPLE x 5 CFM/PERSON	= 213-
SMOKING NOT PERMITTED	PEOPLE x CFM/PERSON	=
AREA	SF x CFM/SF	=
		REQ'D CFM

INFILTRATION

CRACK	FT x CFM/FT	=
DOORS	# x CFM/DOOR	=
		=
		TOTAL CFM

EXH FAN

	=
	=
	CFM

TOTAL O.A. THRU COOLING COIL = 2130 CFM

Coordination of cooling design and heating design is essential and a study of the heating estimate should be made at this time.

APPARATUS DEWPOINT TEMPERATURE

ESHF = 459,710 ▶ EQUIV SEN HT / 591,820 ▶▶ EQUIV TOTAL HT = 0.78

INDICATED ADP = 53 F. SELECTED ADP = 53 F

COIL AIR QUANTITY

SYSTEM AT = (1- .2 BF) (TRM 78 F-TADP 53 F) = 20 F

CFM = 459,710 ▶ EQUIV SEN HT / 1.08 x F SELECTED AT = 21,280

ROOM SUPPLY AIR

■ ROOM SEN HEAT / 1.08 x F SELECTED ROOM AT = CFM

REHEAT REQ'D BTU/HR - SEE NOTE

NOTES (REF AFM 88-15, ATCH 13)

SUMMARY		CHECK FIGURES	
S.A.	= 21280 CFM	SF/TON	= 424 SF/TN
O.A.	= 2130 CFM	S.A/SF	= .85 CFM/SF
EXH AIR	= 2130 CFM	O.A./S.A.	= 10 %
REF EQUIP	= 58.7 TONS		

AF FORM NOV 72 108