NOTE: ALL LETTERING SHALL BE 1/8" MINIMUM HEIGHT.

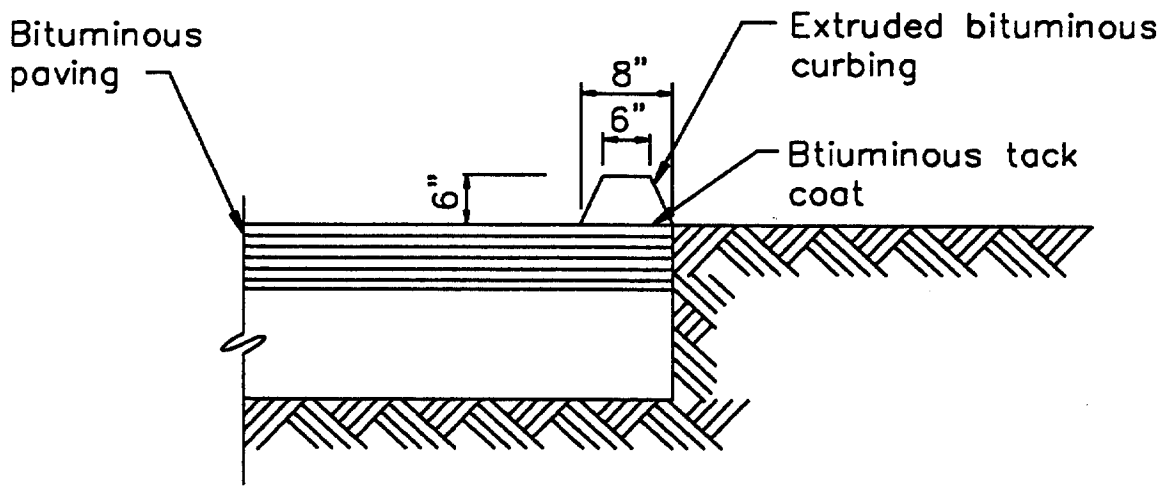

NOTE: Dimensions shown are approximate. Actual dimensions are dependent on machine characteristics.

Designer may vary curb location as required by project.

BITUMINOUS CURB

CORPS OF ENGINEERS, U.S. ARMY, SACRAMENTO DISTRICT STANDARD DETAILS DATE: MAR. 90 SITE DETAILS	S-1 113

NOTE: ALL LETTERING SHALL BE 1/8" MINIMUM HEIGHT.

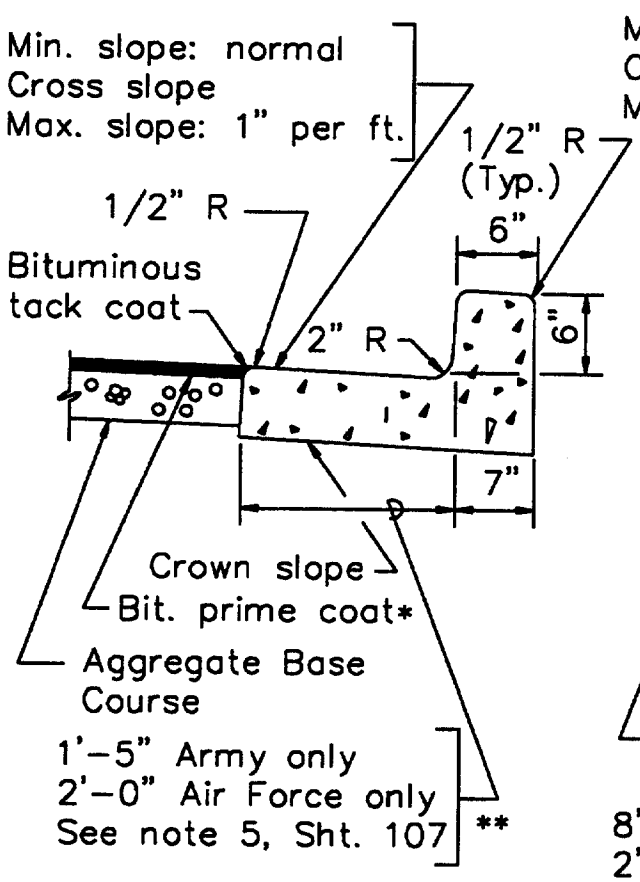

TYPE I BARRIER

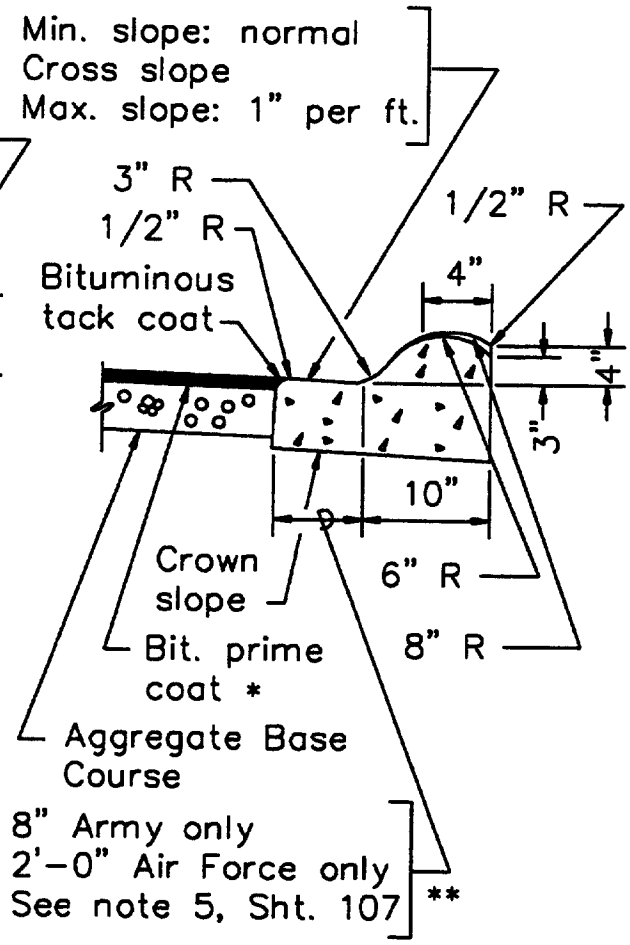

TYPE II MOUNTABLE

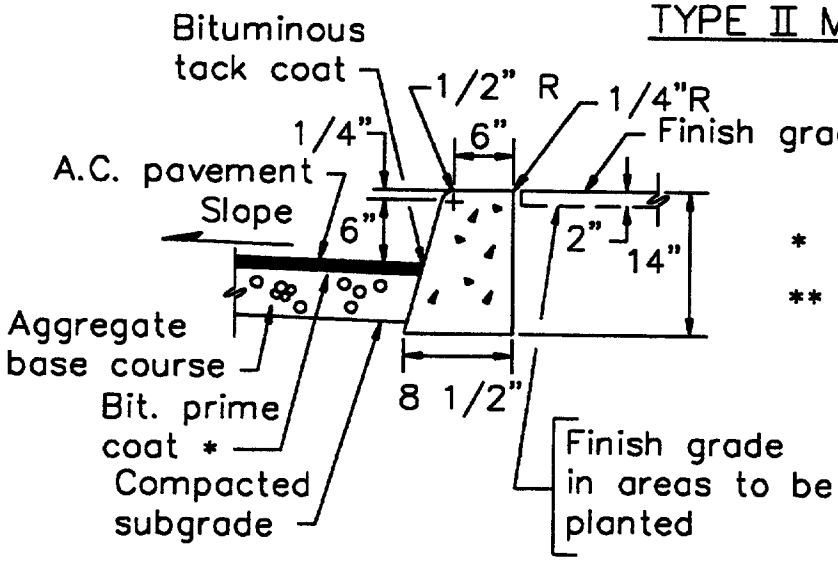

TYLE III BARRIER

NOTES:

* When specified.

** Insert the appropriate dimension and delete other dimension and wording.

CURB AND GUTTER DETAILS

(FLEXIBLE PAVEMENT)

CORPS OF ENGINEERS, U.S. ARMY, SACRAMENTO DISTRICT STANDARD DETAILS DATE: MAR. 90 SITE DETAILS	S-1A 113A

NOTE: ALL LETTERING SHALL BE 1/8" MINIMUM HEIGHT.

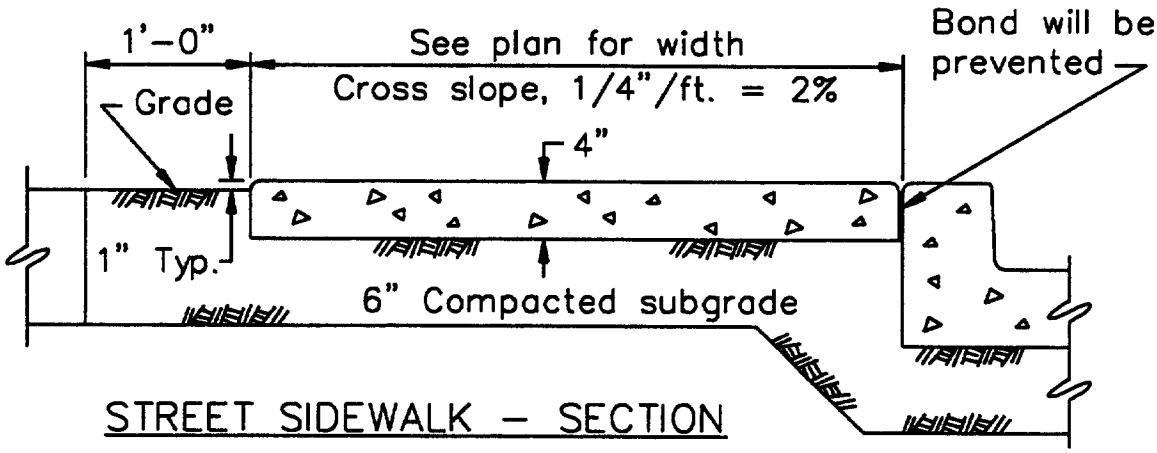

STREET SIDEWALK – SECTION

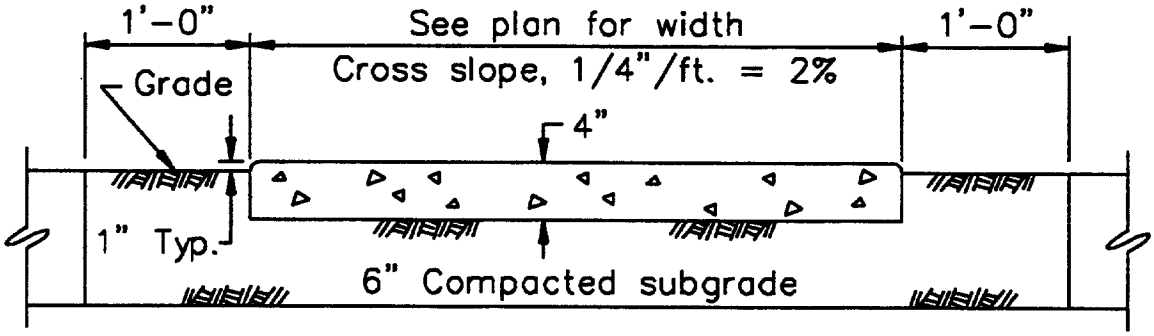

SIDEWALK SECTION – TYPICAL

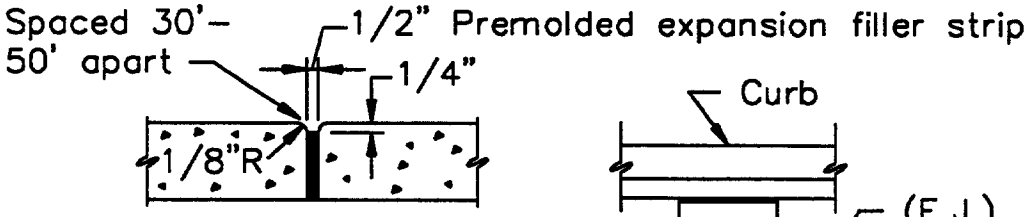

EXPANSION JOINT (E.J.)

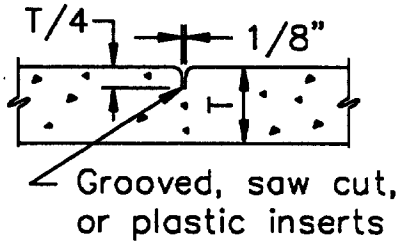

CONTRACTION JOINT (C.T.J.)

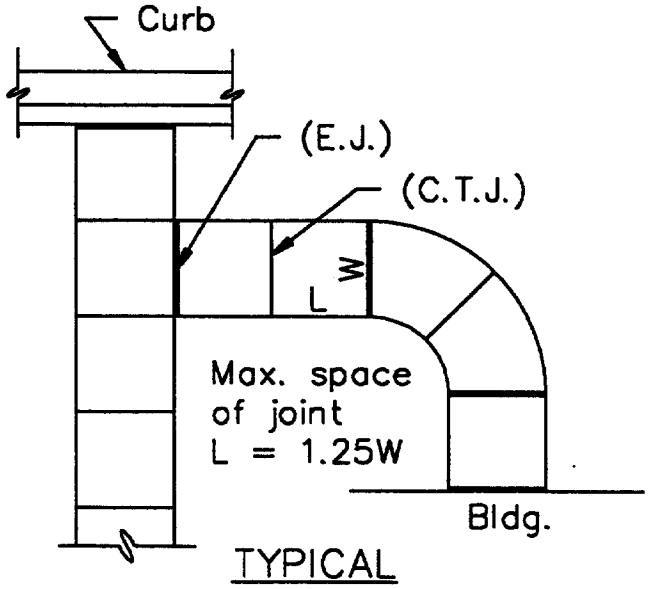

TYPICAL JOINT PATTERN

SIDEWALK DETAIL – TYPICAL

NOT TO SCALE

CORPS OF ENGINEERS, U.S. ARMY, SACRAMENTO DISTRICT STANDARD DETAILS DATE: MAR. 90 SITE DETAILS	S-2 114

NOTE: ALL LETTERING SHALL BE 1/8" MINIMUM HEIGHT.

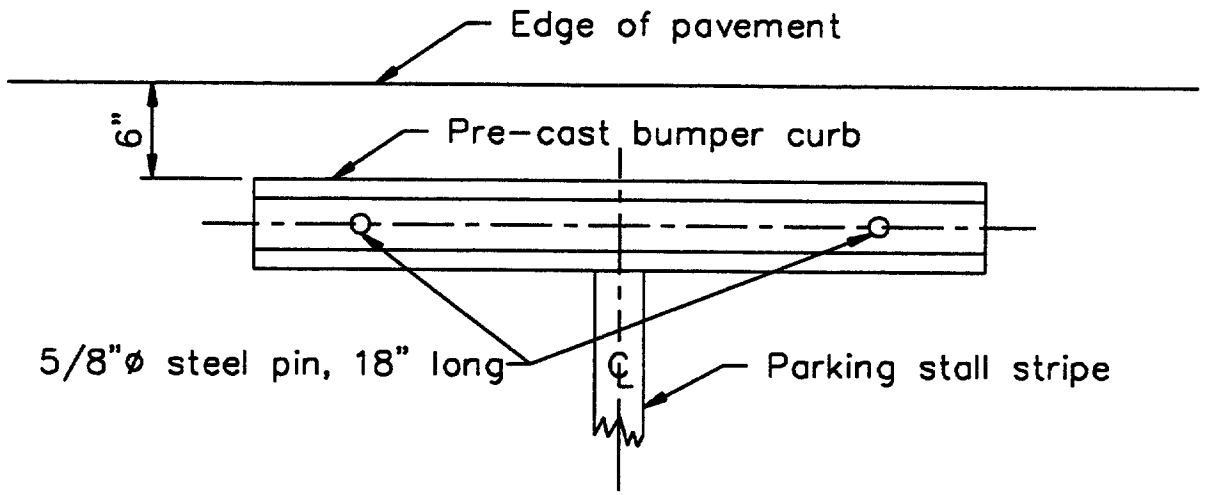

PLAN

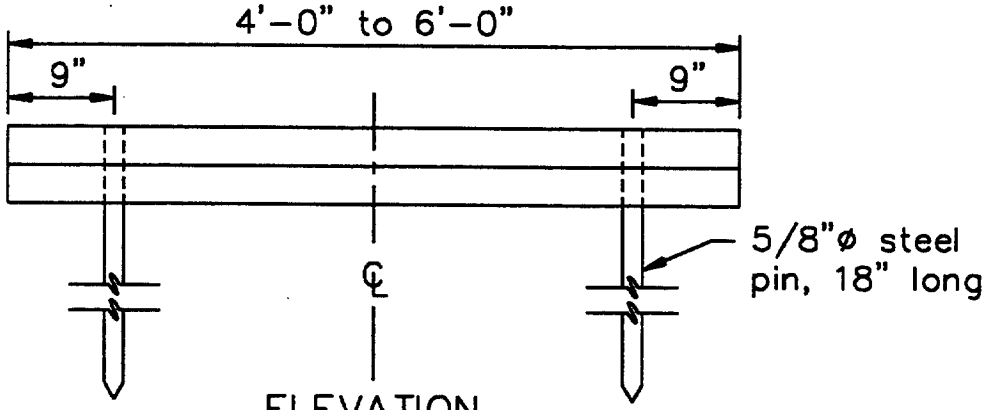

ELEVATION

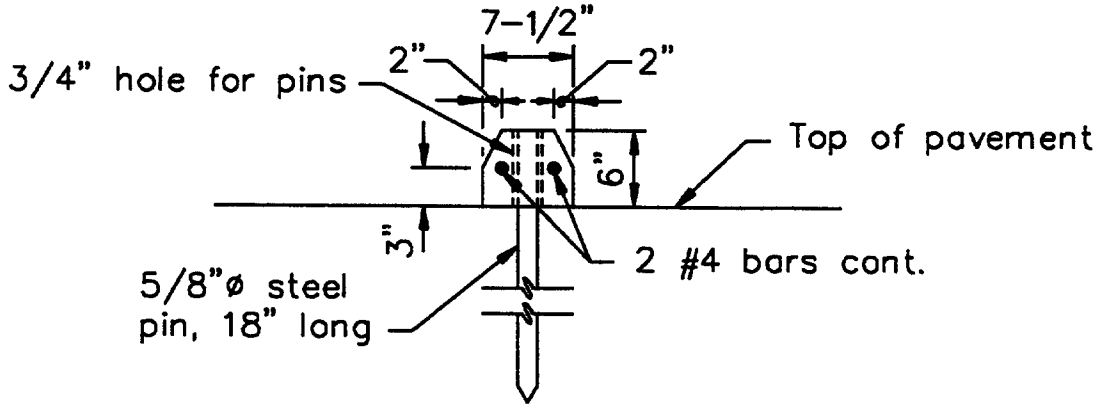

SECTION

NOTE: Designer may vary dimensions to conform to standard manufactured bumper.

PRECAST CONCRETE BUMPER DETAIL

CORPS OF ENGINEERS, U.S. ARMY, SACRAMENTO DISTRICT STANDARD DETAILS DATE: MAR. 90 SITE DETAILS	S-3 115

NOTE: ALL LETTERING SHALL BE 1/8" MINIMUM HEIGHT.

CIVIL LEGEND OF MATERIALS – PLAN

NEW	EXISTING	TO BE REMOVED	
			BUILDING
			ASPHALT CONC. PVMT.
			PORTLAND CEMENT CONC. PVMT.
			PORTLAND CEMENT CONC. SIDEWALK
			BITUMINOUS SURFACE TREATMENT
			CONCRETE CURB & GUTTER
3500	--3500--		CONTOUR LINES
25.2			FINISH GRADE
	25.2		SPOT ELEVATION
			SWALE OR DITCH
			RAILROAD TRACK
FM			FORCE MAIN (SEWER)
FW			FIRE WATER
W	W	W	WATER LINE
FH	FH		FIRE HYDRANT
			GATE VALVE
			GATE VALVE W/INDICATOR POST
T			TAPPING SLEEVE AND VALVE
SS	SS	SS	SANITARY SEWER LINE
			CLEANOUT
			MANHOLE
SD	SD	SD	STORM DRAIN LINE
			STORM DRAIN INLET OR CATCH BASIN
			MANHOLE W/SLOTTED INLET
			DIRECTION OF FLOW
G	G	G	GAS LINE
T	T	T	TELEPHONE LINE (UT = UNDERGROUND)
E	E	E	ELECTRICAL LINE (UE = UNDERGROUND)
			POWER POLE
			POLE ANCHOR, GUY
			LUMINAIRE
			CHAIN LINK FENCE (WITH OR WITHOUT BARBED WIRE OUTRIGGERS)
X X X	X X X	X X X	BARBED WIRE FENCE
			BENCH MARK
			SOIL TEST HOLE

NOTE: Show only those items in the legend of details which actually pertain to the project.

NOTE: ALL LETTERING SHALL BE 1/8" MINIMUM HEIGHT.

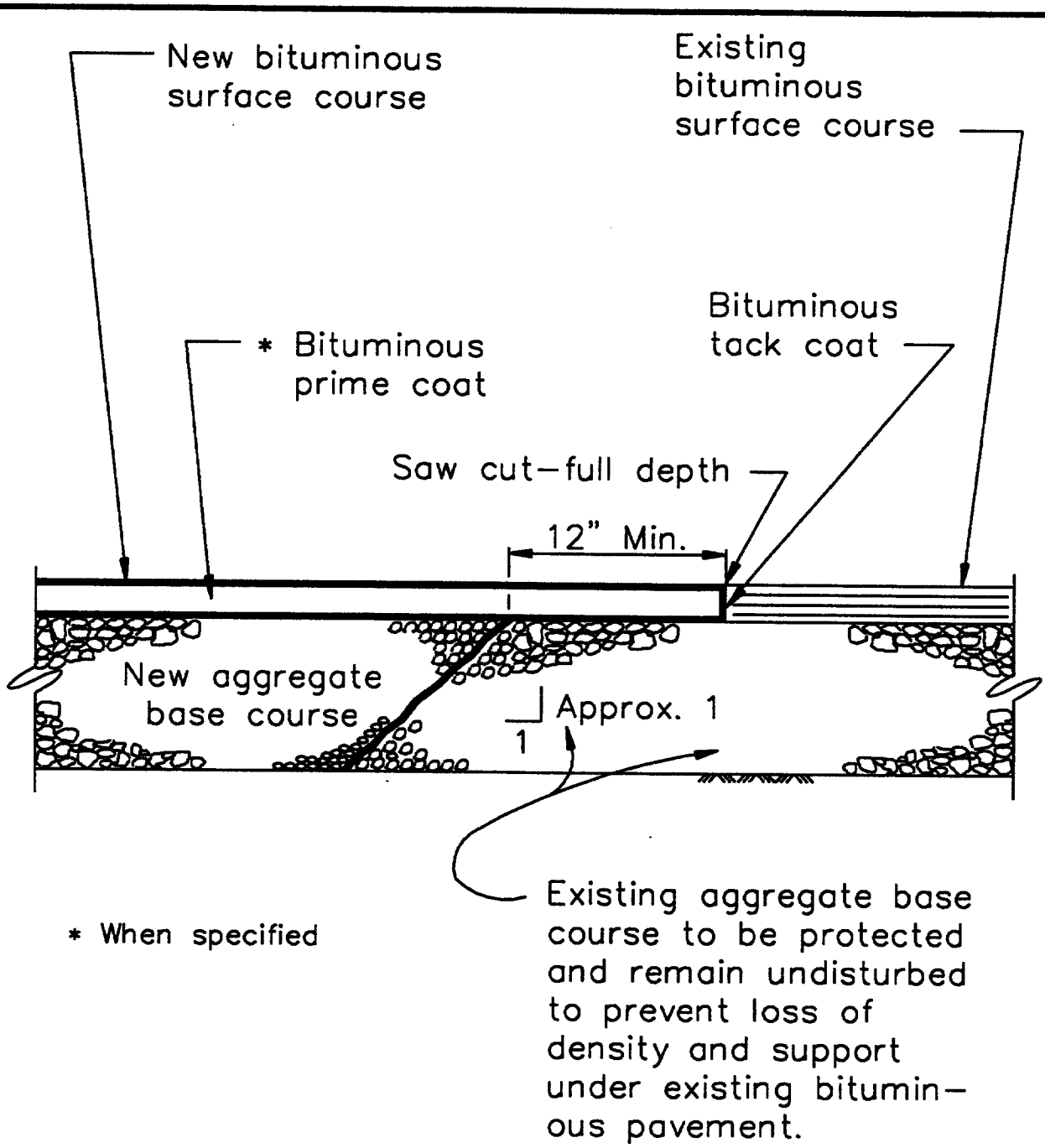

* When specified

ASPHALT PAVEMENT JOINT DETAIL

NOT TO SCALE

CORPS OF ENGINEERS, U.S. ARMY, SACRAMENTO DISTRICT STANDARD DETAILS DATE: OCT. 89 SITE DETAILS	S–5 117

NOTE: ALL LETTERING SHALL BE 1/8" MINIMUM HEIGHT.

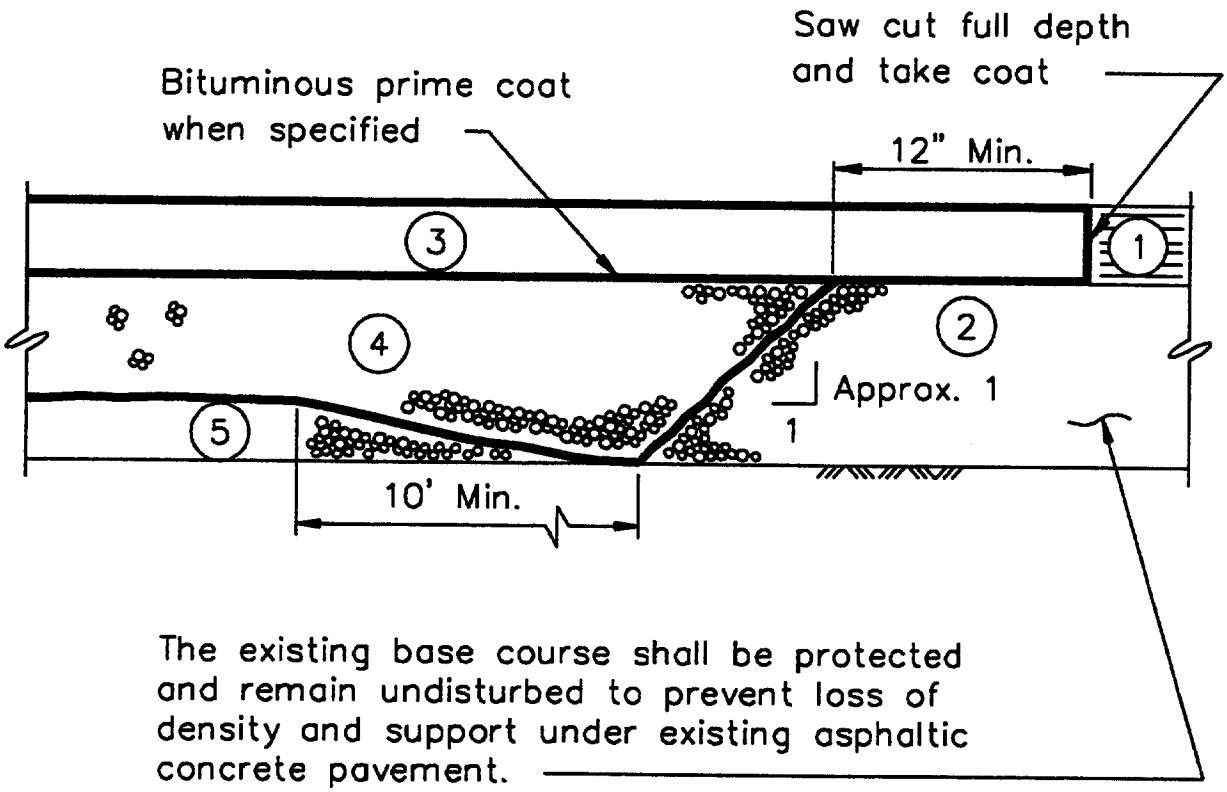

1. Existing asphaltic concrete pavement
2. Existing aggeregate base course
3. New asphaltic concrete pavement
4. New aggregate base course (NFS)
5. New subbase course (S-1 Material)

EXISTING-NEW FLEXIBLE PAVEMENT TRANSITION ZONE FOR FROST AREAS

NOT TO SCALE

CORPS OF ENGINEERS, U.S. ARMY, SACRAMENTO DISTRICT STANDARD DETAILS DATE: MAR. 90 SITE DETAILS	S-5A 117A

NOTE: ALL LETTERING SHALL BE 1/8" MINIMUM HEIGHT.

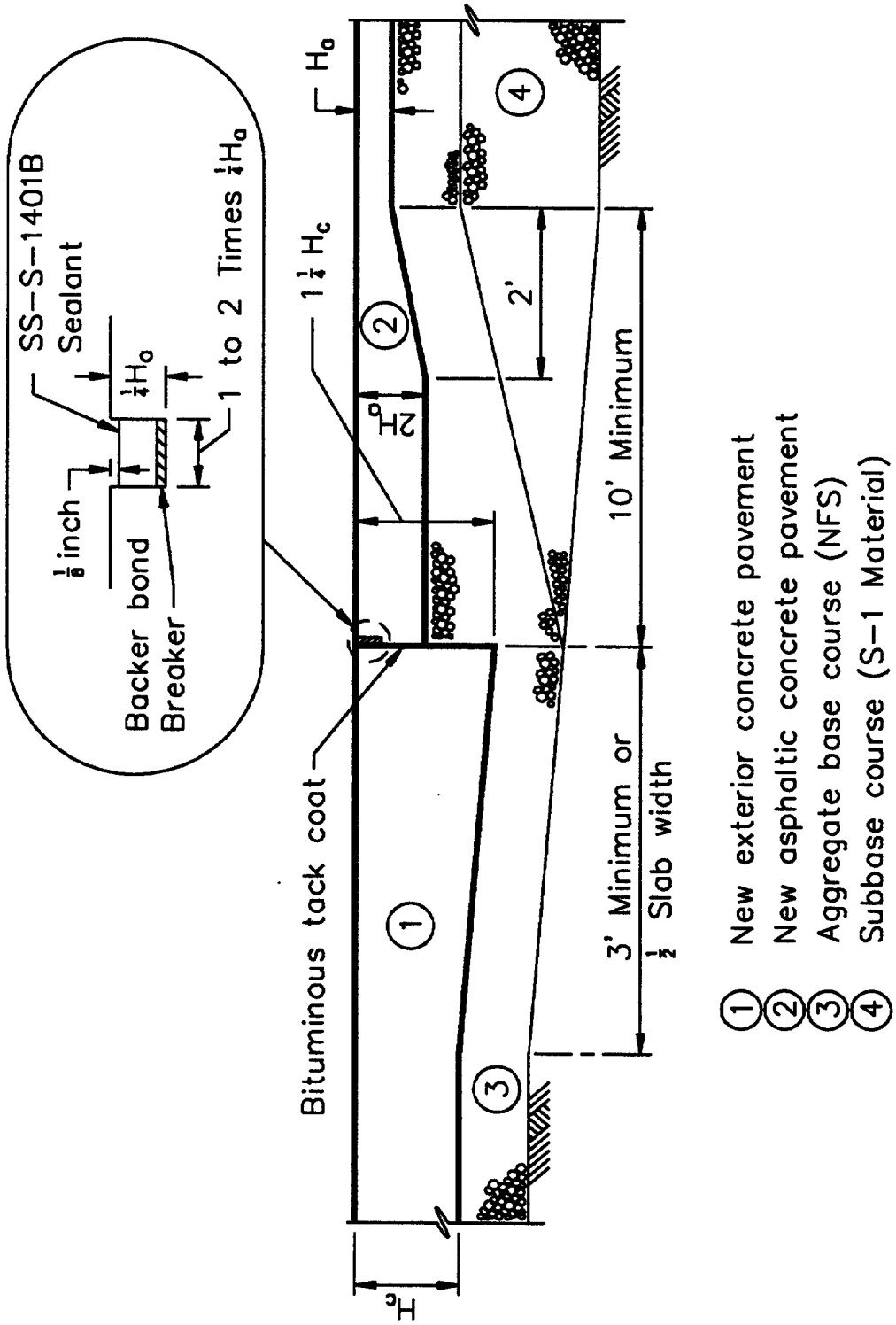

RIGID-FLEXIBLE PAVEMENT TRANSITION ZONE

FOR FROST AREAS

NOT TO SCALE

CORPS OF ENGINEERS, U.S. ARMY, SACRAMENTO DISTRICT STANDARD DETAILS DATE: OCT 89 SITE DETAILS	S-5B 117B

NOTE: ALL LETTERING SHALL BE 1/8" MINIMUM HEIGHT.

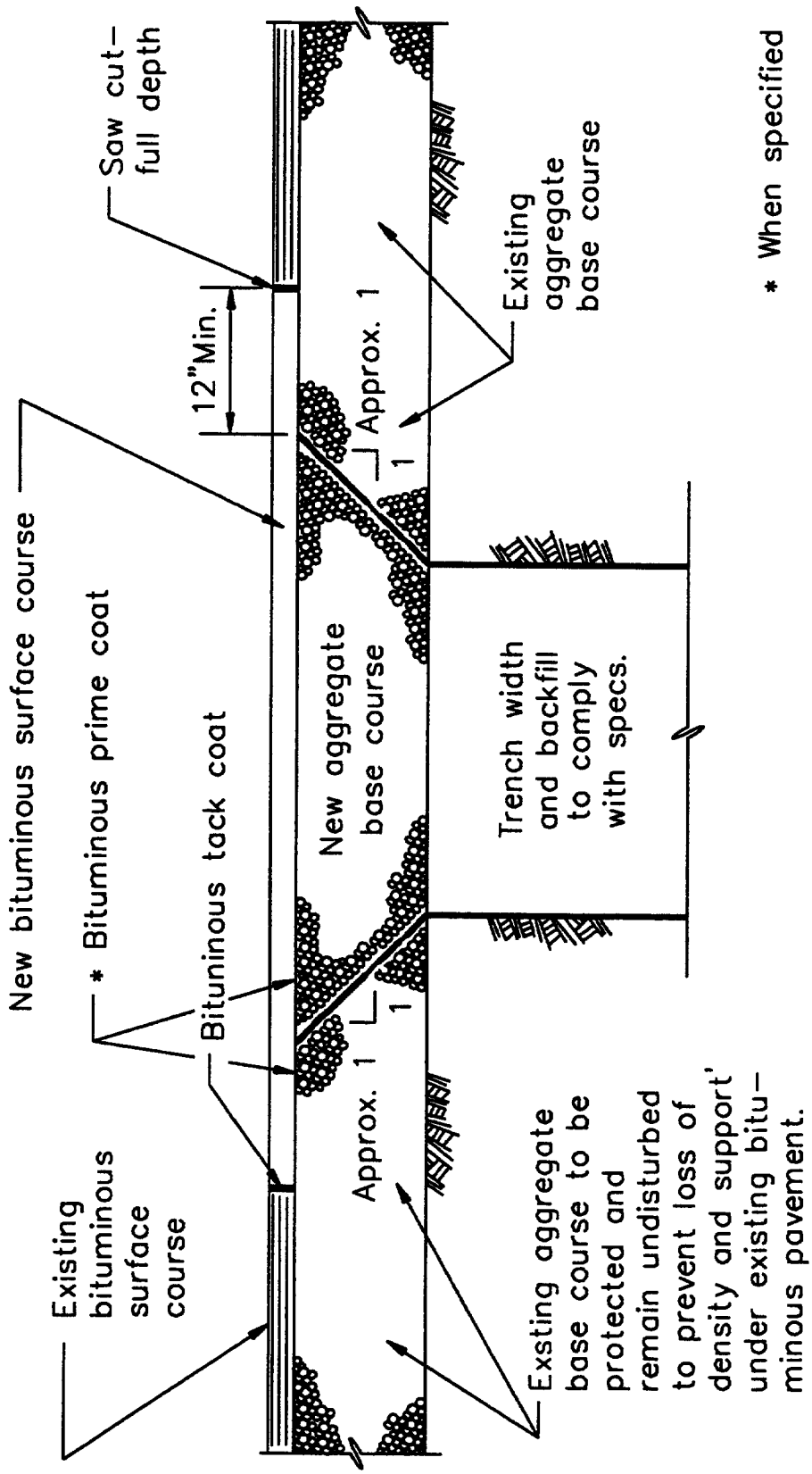

ASPHALT PAVEMENT REPAIR DETAIL
FOR UTILITY TRENCHES

NOT TO SCALE

CORPS OF ENGINEERS, U.S. ARMY, SACRAMENTO DISTRICT STANDARD DETAILS DATE: MAR. 90 SITE DETAILS	S-6
	118

NOTE: ALL LETTERING SHALL BE 1/8" MINIMUM HEIGHT.

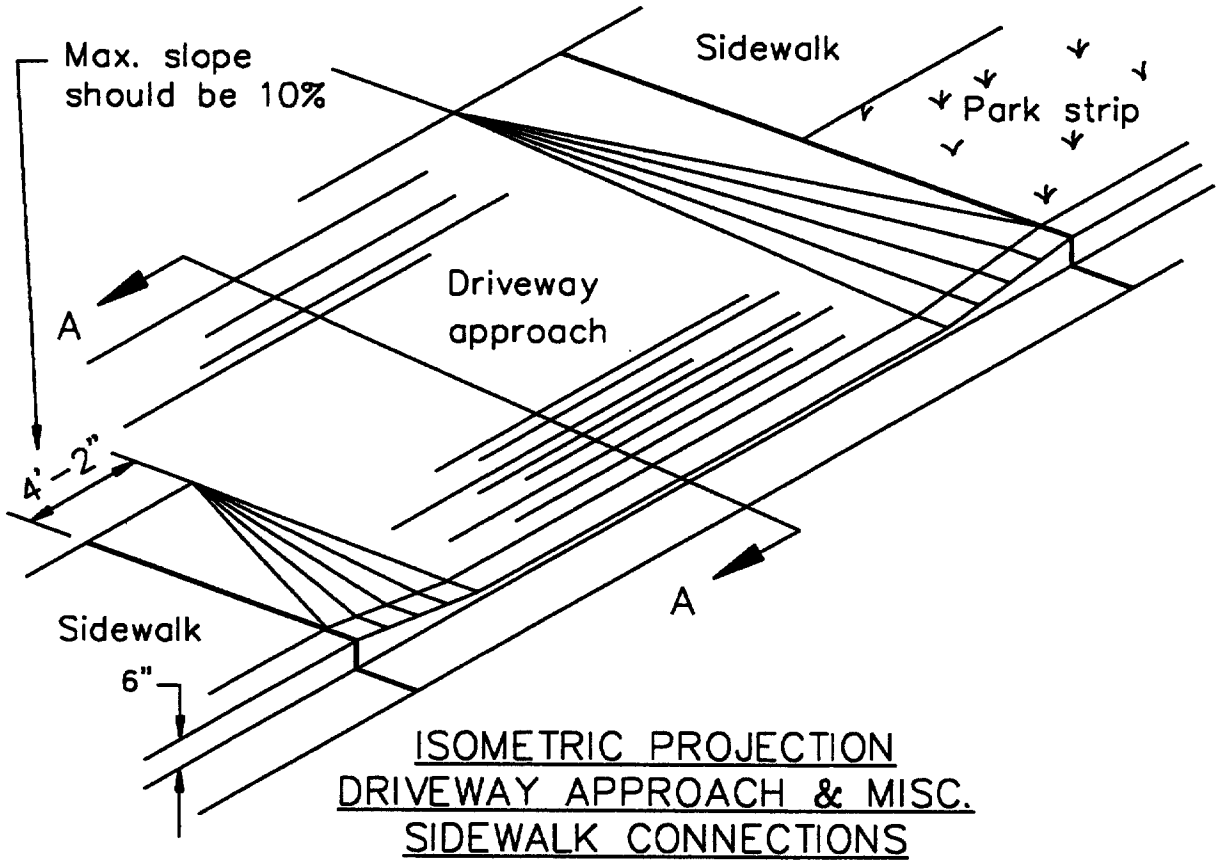

ISOMETRIC PROJECTION
DRIVEWAY APPROACH & MISC.
SIDEWALK CONNECTIONS

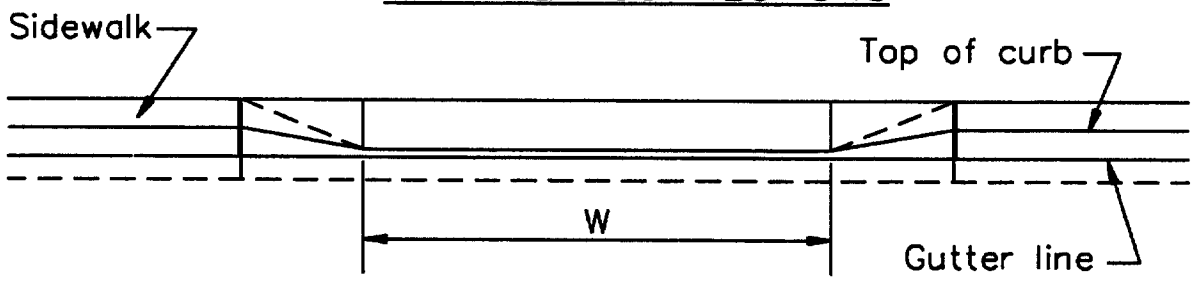

ELEVATION

NOTE:
See TM 5-822-6 For pavement thickness

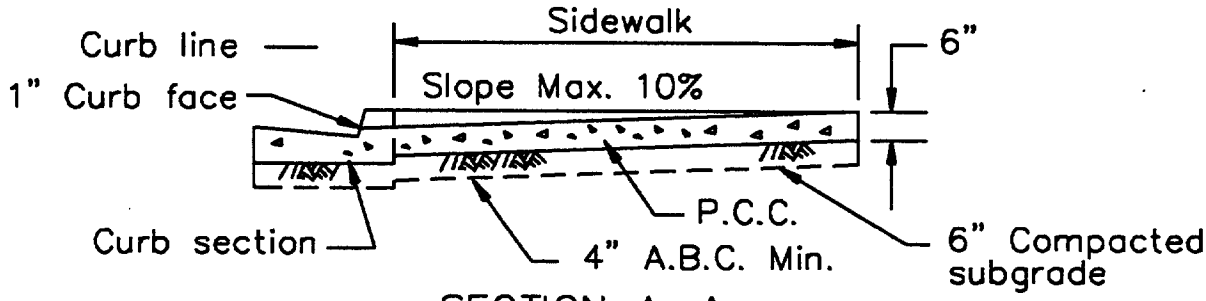

SECTION A-A

CONCRETE DRIVEWAY DETAILS

CORPS OF ENGINEERS, U.S. ARMY, SACRAMENTO DISTRICT STANDARD DETAILS DATE: MAR. 90 SITE DETAILS	S-7 119

NOTE: ALL LETTERING SHALL BE 1/8" MINIMUM HEIGHT.

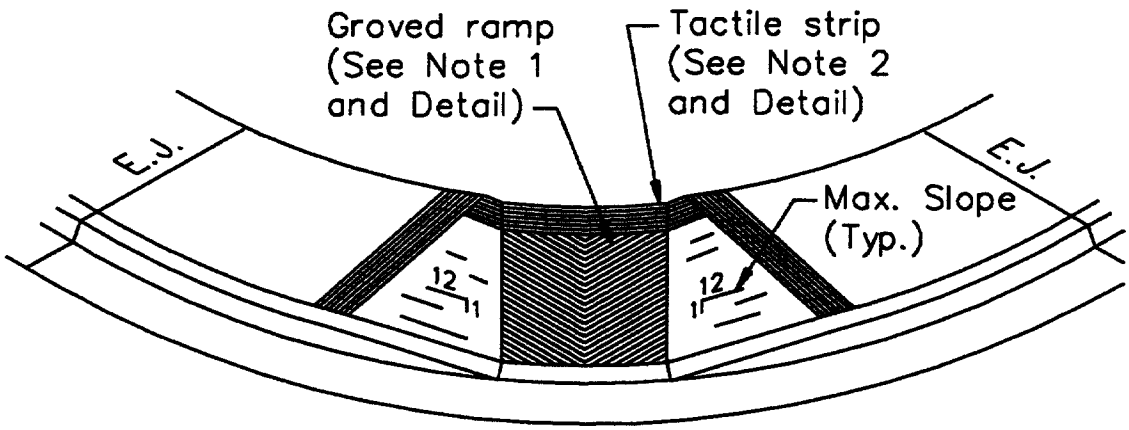

SIDEWALK RAMP AT
CENTER OF CURB RETURN

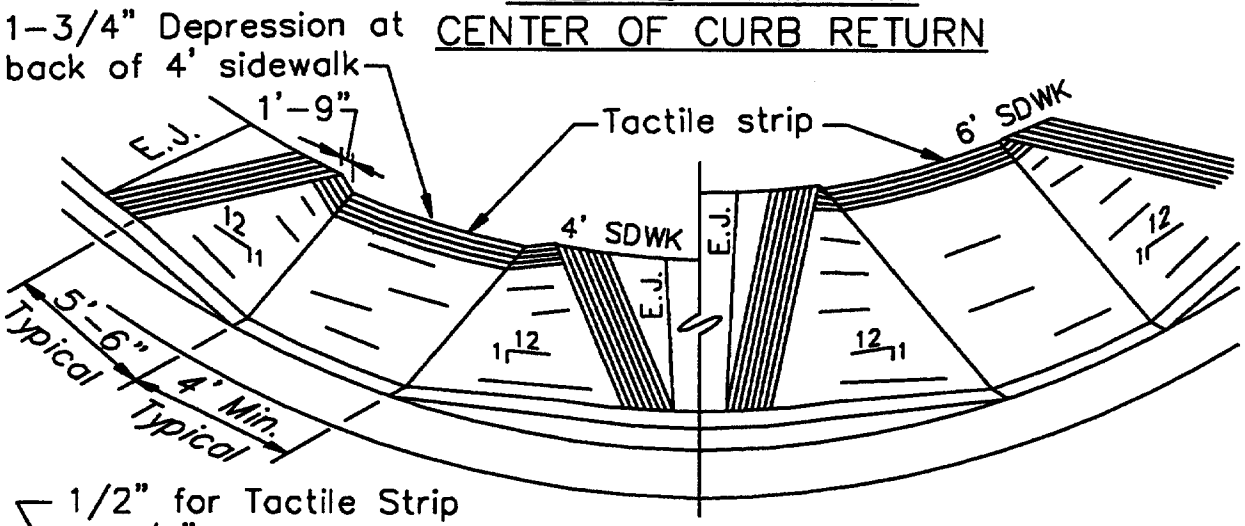

SIDEWALK RAMP
NOT AT CENTER OF CURB RETURN

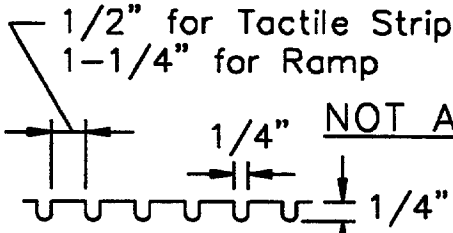

TYPICAL DETAIL
FOR GROVES

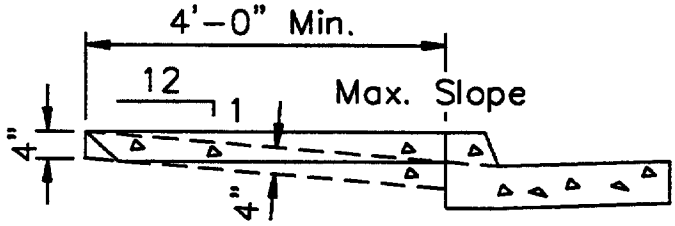

CROSS SECTION

NOTES:

1. Ramps located in the center of curb returns shall be grooved. The grooves shall parallel the crosswalks and form a "V" pattern pointing towards the center of the intersection.
2. Ramps shall have a heavy broom finish transverse to the slope of the ramp and a tactile strip 1' (one ft.) wide along the perimeter.
3. Ramps to be constructed at the center of all curb returns or as shown on the plans.

SIDEWALK RAMPS, TYPE I BARRIER CURB

CORPS OF ENGINEERS, U.S. ARMY, SACRAMENTO DISTRICT STANDARD DETAILS DATE: JUNE 90 SITE DETAILS	S-7A 119A

NOTE: ALL LETTERING SHALL BE 1/8" MINIMUM HEIGHT.

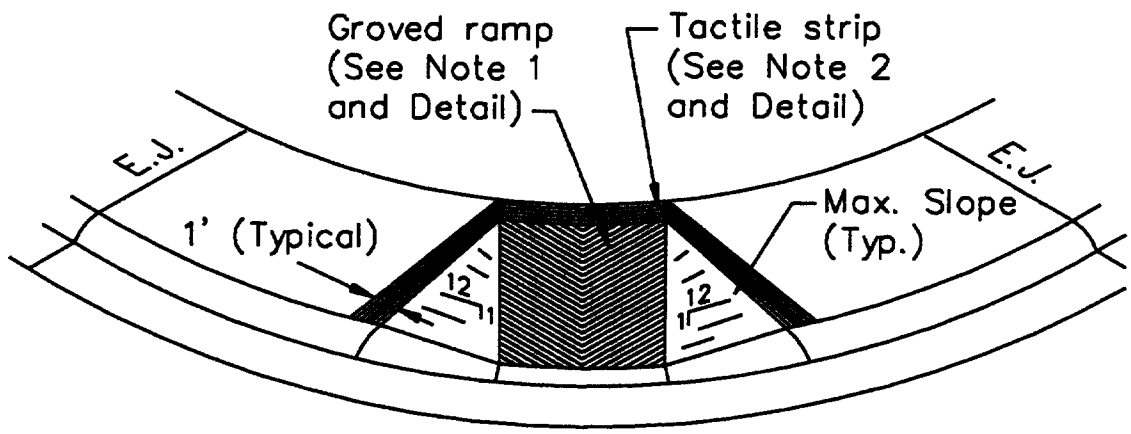

SIDEWALK RAMP AT
CENTER OF CURB RETURN

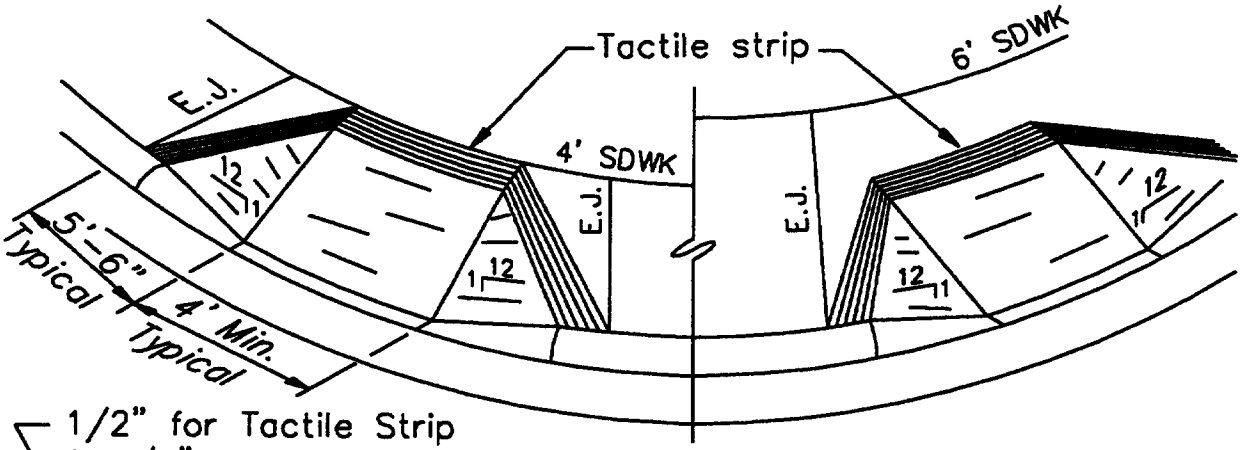

SIDEWALK RAMP
NOT AT CENTER OF CURB RETURN

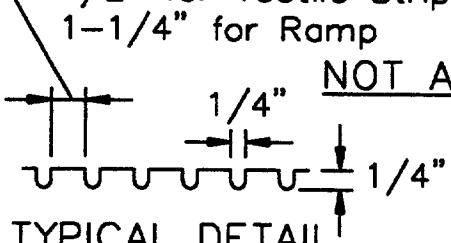

TYPICAL DETAIL
FOR GROVES

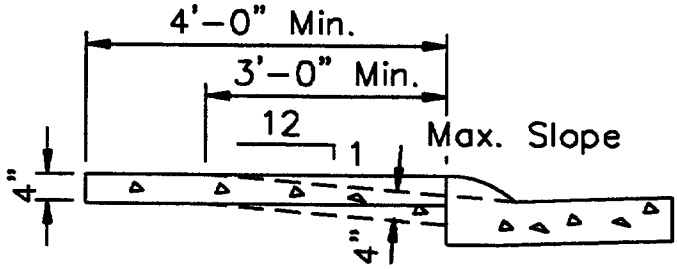

CROSS SECTION

NOTES:

1. Ramps located in the center of curb returns shall be grooved. The grooves shall parallel the crosswalks and form a "V" pattern pointing towards the center of the intersection.
2. Ramps shall have a heavy broom finish transverse to the slope of the ramp and a tactile strip 1' (one ft.) wide along the perimeter.
3. Ramps to be constructed at the center of all curb returns or as shown on the plans.

SIDEWALK RAMPS, TYPE II BARRIER CURB

CORPS OF ENGINEERS, U.S. ARMY, SACRAMENTO DISTRICT STANDARD DETAILS DATE: JUNE 90 SITE DETAILS	S-7B 119B

NOTE: ALL LETTERING SHALL BE 1/8" MINIMUM HEIGHT.

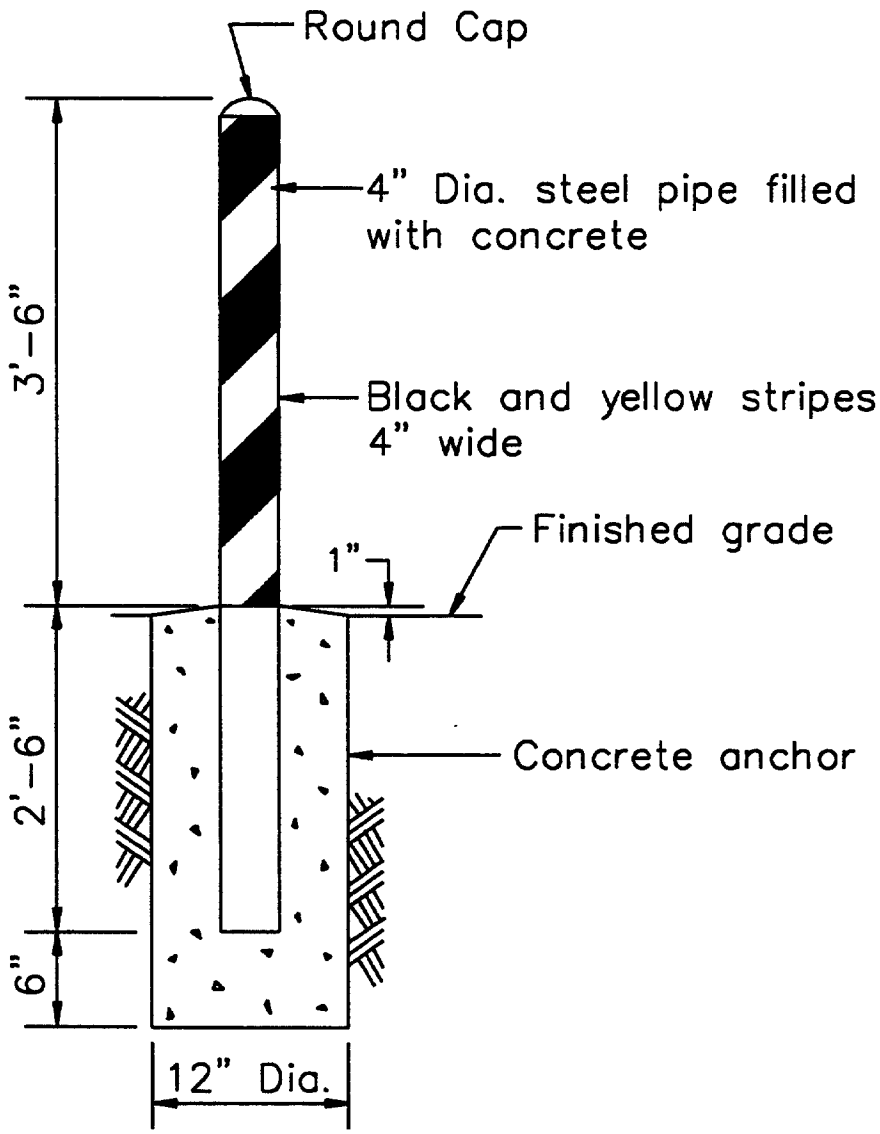

GUARD POST DETAIL

CORPS OF ENGINEERS, U.S. ARMY, SACRAMENTO DISTRICT STANDARD DETAILS DATE: FEB. 90 SITE DETAILS	S-8 120

NOTE: ALL LETTERING SHALL BE 1/8" MINIMUM HEIGHT.

D-3
Variable Width
W x 8"

STREET AND ROAD NAME SIGNS

4" LEGEND, 3" ABBREVIATIONS. WHITE REFLECTORIZED LEGEND AND BORDER ON GREEN REFLECTORIZED BACKGROUND.

R7-8
12" x 18"

HANDICAP PARKING SIGN

2" LEGEND, 4" SYMBOL GREEN LEGEND AND BORDER, WHITE SYMBOL ON BLUE BACKGROUND ON WHITE MAJOR BACKGROUND.

R1-1
30" x 30"

STOP SIGN

10" LEGEND, WHITE RFLECTORIZED LEGEND AND BORDER ON RED REFLECTORIZED BACKGROUND.

STREET NAME SIGNS, TRAFFIC SIGNS HANDICAP PARKING SIGNS

NOTE: ALL LETTERING SHALL BE 1/8" MINIMUM HEIGHT.

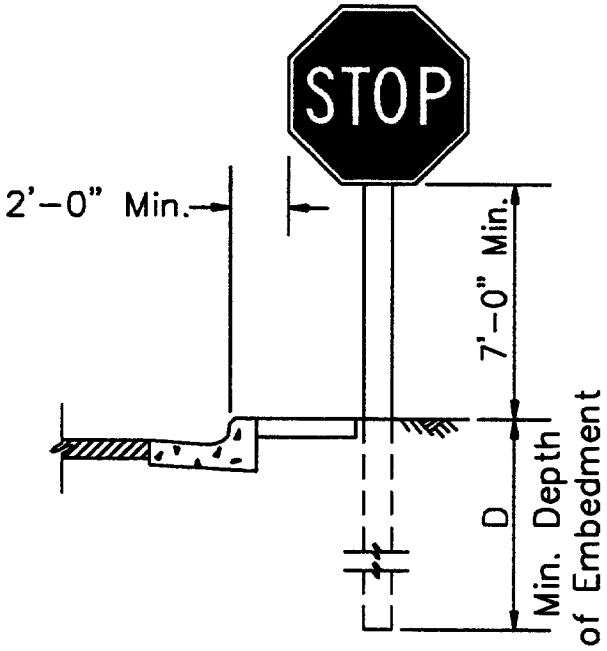

RESIDENTIAL – URBAN

SPECIFICATIONS		
SIGN AREA	POST	EMBED-MENT (D)
Sq. Ft.	Size	Ft.
1.5	4x4	4
2.0	4x4	4
3.0	4x4	4
4.0	4x4	4
5.0	4x4	5
6.25	4x4	5
7.5	4x4	5
9.0	4x6	5
12.0	4x6	5

3/8" x 5", 4 x 4 Post
3/8" x 7", 4 x 6 Post
Cadmium plated machine bolt with 1" fiber washer

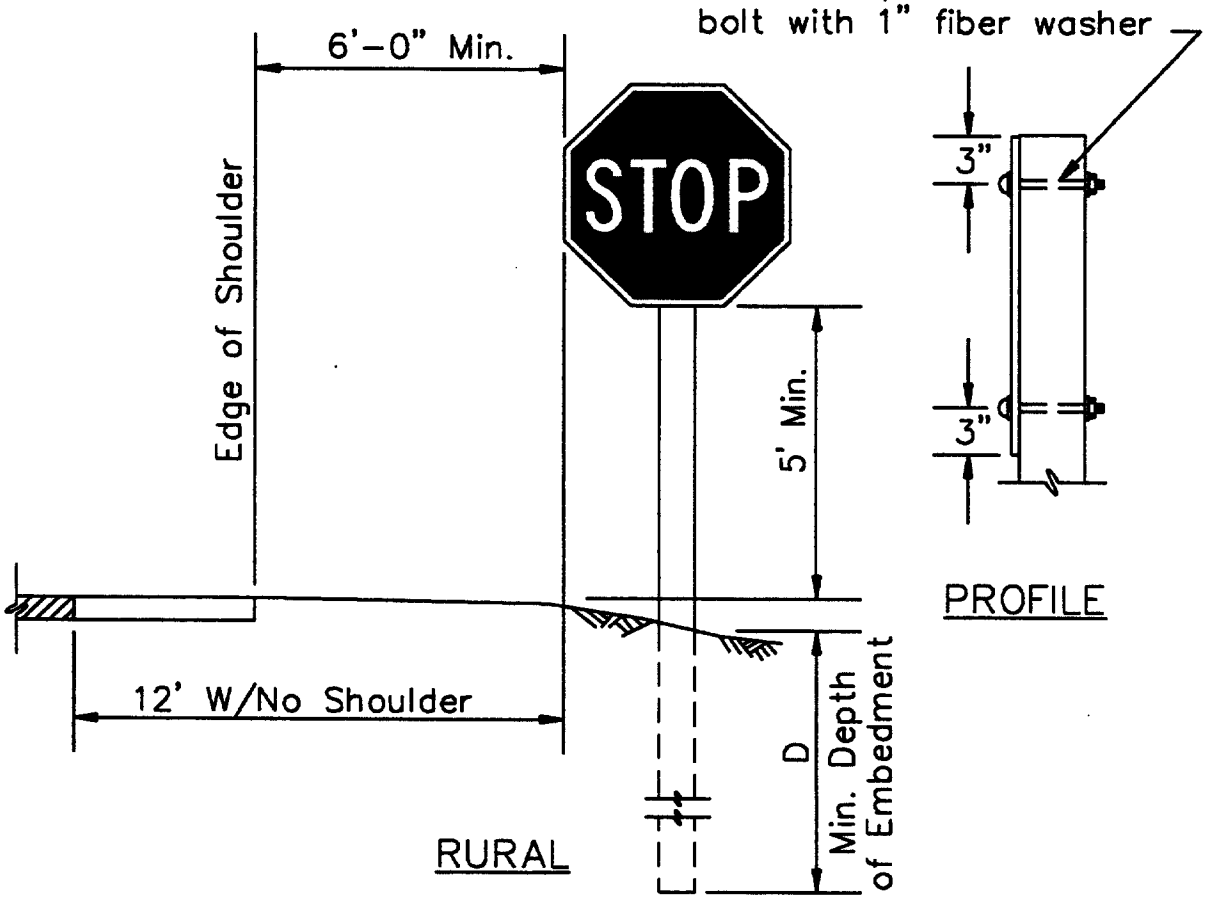

PROFILE

RURAL

TRAFFIC SIGN INSTALLATION – WOOD POSTS

CORPS OF ENGINEERS, U.S. ARMY, SACRAMENTO DISTRICT STANDARD DETAILS DATE: FEB. 90 SITE DETAILS	S-10 122

NOTE: ALL LETTERING SHALL BE 1/8" MINIMUM HEIGHT.

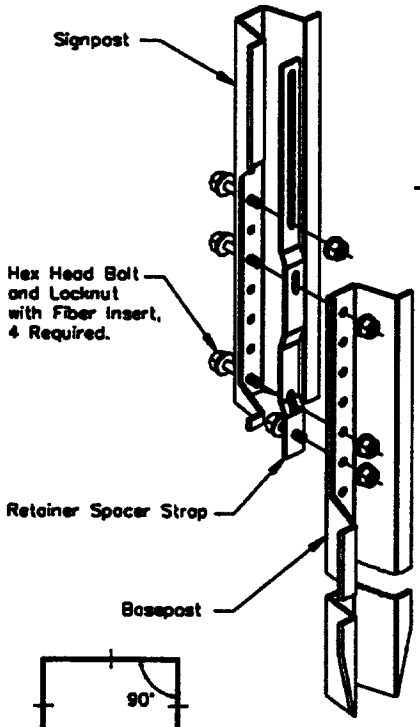

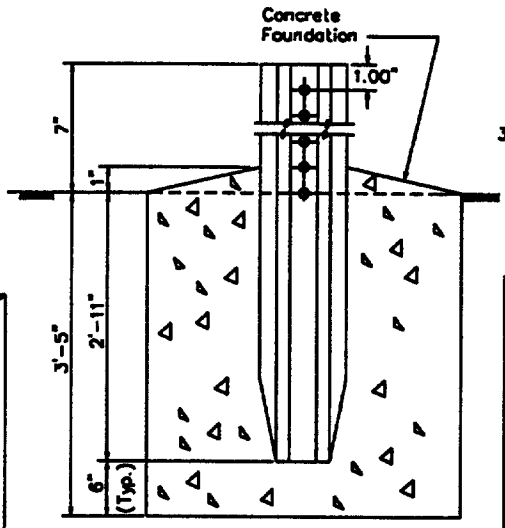

BASEPOST

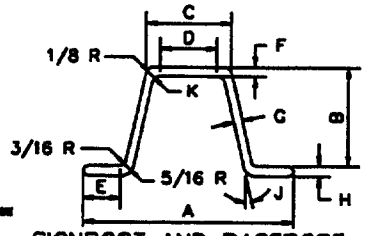

SIGNPOST AND BASEPOST CROSS SECTION

SIGN POST AND BASE POST DIMENSIONS		
	2.50 LB/FT	4.00 LB/FT
A	3 1/8"	3 1/2"
B	1.562"	1.750"
C	1 1/4"	1 43/64"
D	1 1/16"	1 13/32"
E	5/8"	23/32"
F	0.149"	0.230"
G	0.132"	0.175"
H	0.164"	0.250"
J (Angle)	12 1/2°	11 1/2°
K (Radius)	1/8"	3/16"

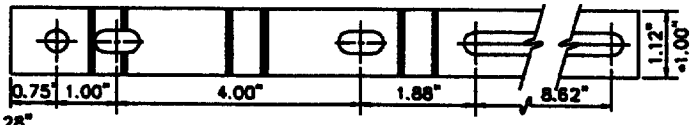

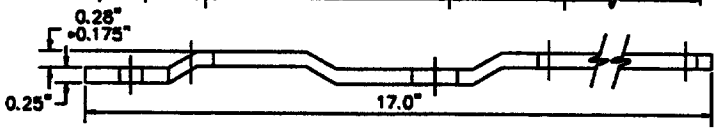

RETAINER-SPACER STRAP FOR 4.0 LB. POST

• DEMENSIONS FOR 2.5 LB. POST

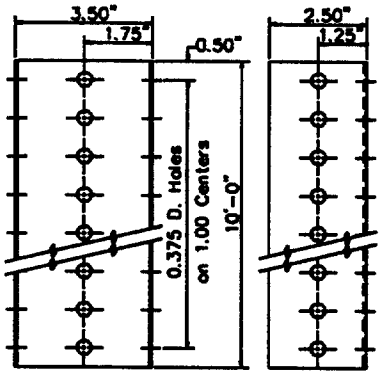

FORMED CHANNEL SIGN MOUNT

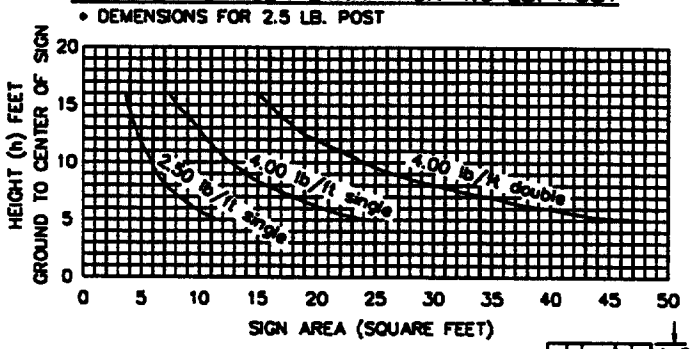

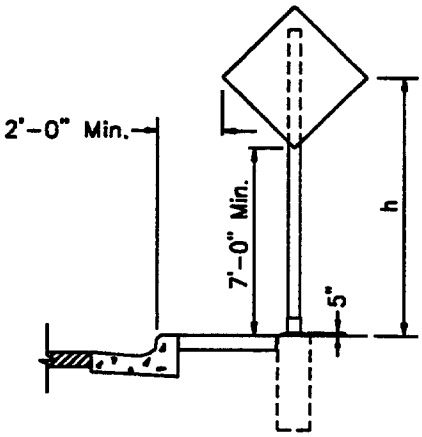

RESIDENTIAL - URBAN

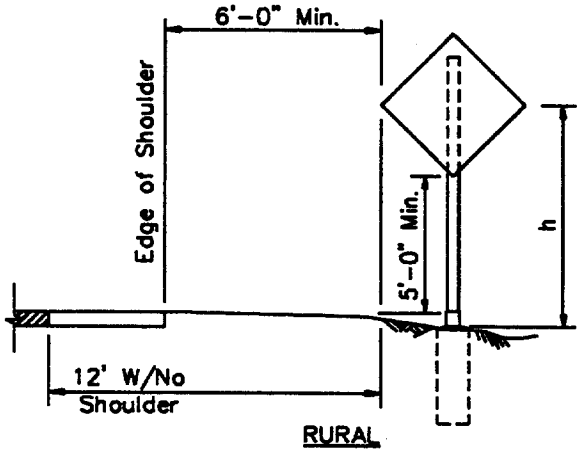

RURAL

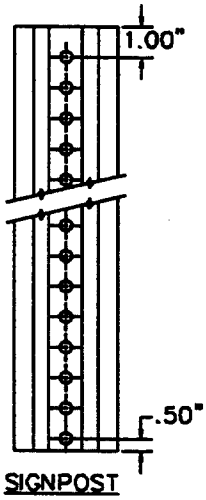

SIGNPOST

TRAFFIC SIGN INST.-FLANGED PERFORATED POSTS

CORPS OF ENGINEERS, U.S. ARMY, SACRAMENTO DISTRICT
STANDARD DETAILS
SITE DETAILS
DATE: MAR. 90

S-10A

NOTE: ALL LETTERING SHALL BE 1/8" MINIMUM HEIGHT.

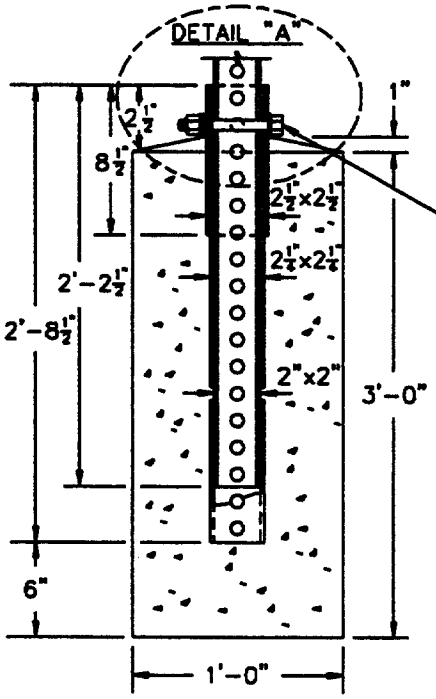

FOUNDATION DETAIL

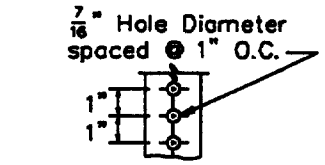

POST DETAIL (Typ.)

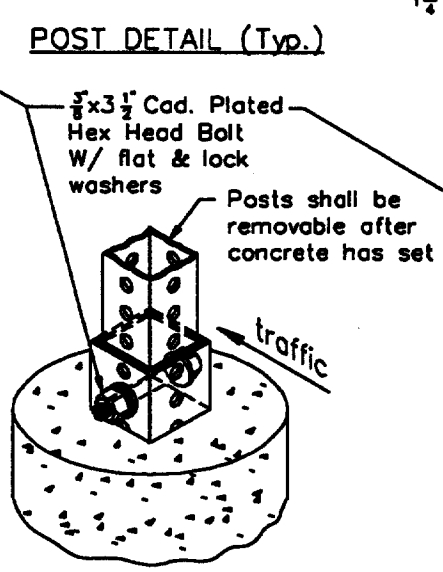

DETAIL "A"

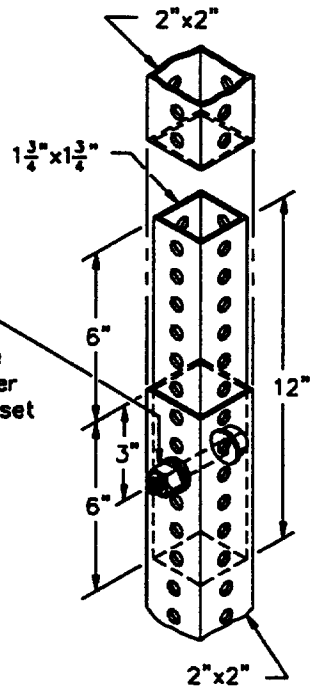

PERMISSIBLE FIELD SPLICE

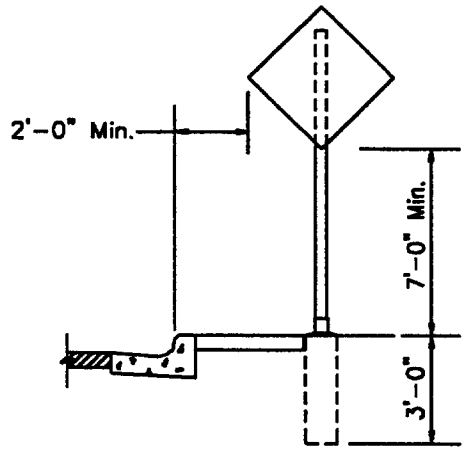

RESIDENTIAL – URBAN

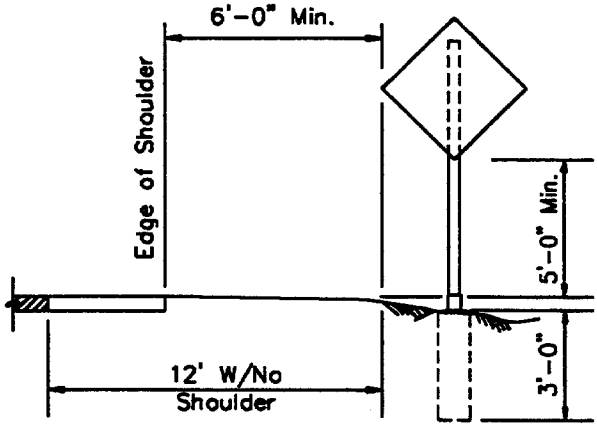

RURAL

NOTES

Type P-1 & P-2 Perforated posts shall be Square Tube formed from 0.105 U.S.S. gauge ASTM A-366 cold rolled carbon steel. The square tubes shall be welded directly in the corner by high frequency resistance welding or equal. The posts shall be externally scarfed to agree with std. corner radii of $\frac{5}{32}" \pm \frac{1}{64}"$.

Type P-1 & P-2 perforated posts shall be galvanized to conform to ASTM A-525 Coating designation G-90.

All hardware shall conform to ASTM A-307 Class A.

All hardware shall be galvanized to conform to ASTM A-153 or Cadmium Plated to conform to ASTM A-165.

TRAFFIC SIGN INST.–TUBULAR PERFORATED POSTS

CORPS OF ENGINEERS, U.S. ARMY, SACRAMENTO DISTRICT STANDARD DETAILS DATE: FEB. 90 SITE DETAILS	S-10B 124

NOTE: ALL LETTERING SHALL BE 1/8" MINIMUM HEIGHT.

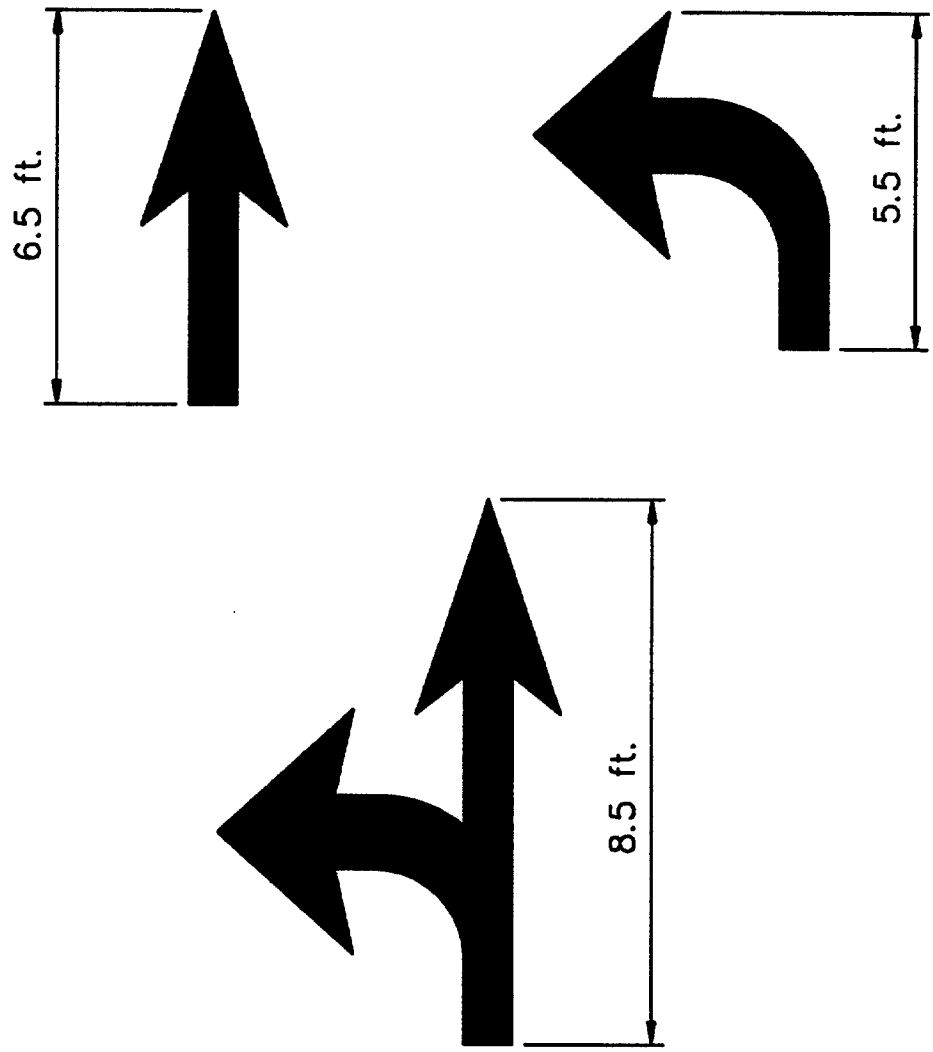

NOTE:

1. Arrows shall be white.

PAVEMENT MARKING ARROWS

SCALE: NONE

CORPS OF ENGINEERS, U.S. ARMY, SACRAMENTO DISTRICT STANDARD DETAILS DATE: OCT. 89 SITE DETAILS	S-11 125

NOTE: ALL LETTERING SHALL BE 1/8" MINIMUM HEIGHT.

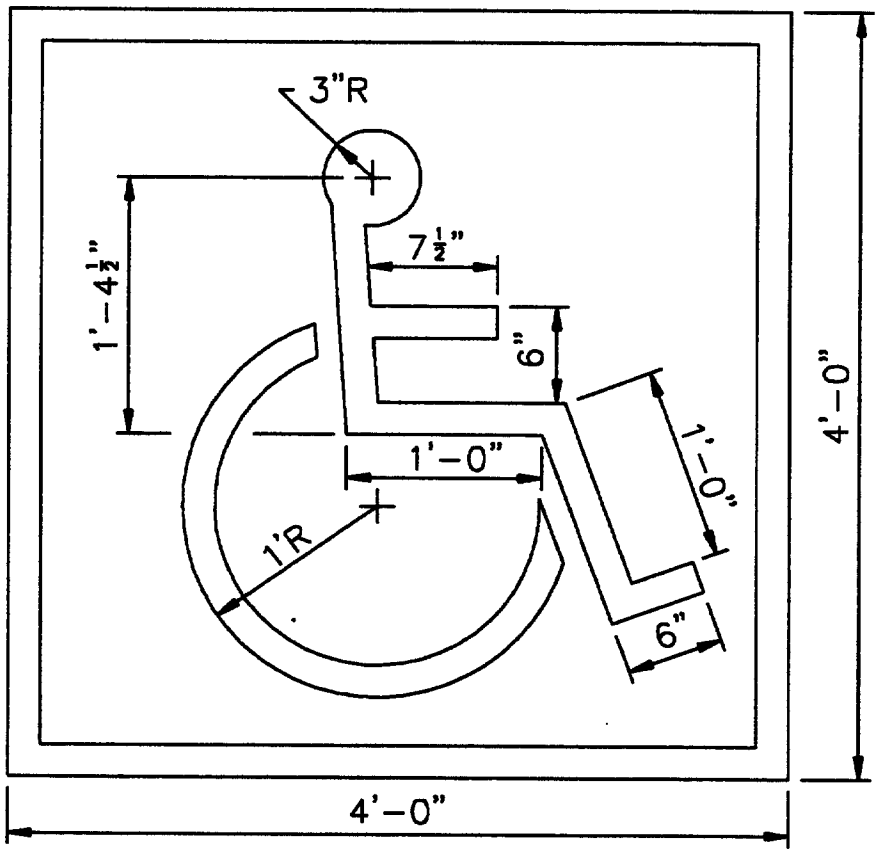

NOTES:

1. INTERNATIONAL PICTOGRAPH SYMBOL WHITE FED. STD. 17875.
2. 4"-BORDER-WHITE FED. STD. 17875.
3. BACKGROUND-BLUE FED. STD. 15180.

HANDICAP PARKING STALL DETAIL FOR PAVEMENT MARKING

SCALE: 1" = 1'-0"

CORPS OF ENGINEERS, U.S. ARMY, SACRAMENTO DISTRICT STANDARD DETAILS DATE: OCT. 89 SITE DETAILS	S-12 126

NOTE: ALL LETTERING SHALL BE 1/8" MINIMUM HEIGHT.

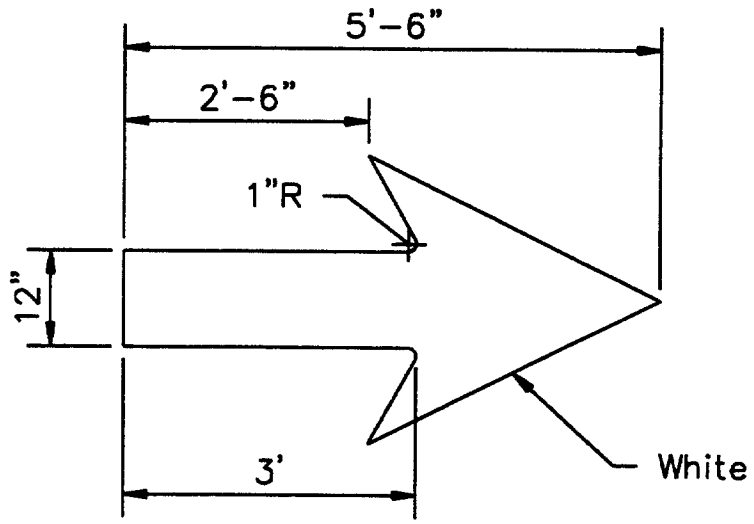

PARKING LOT DIRECTION ARROW

SCALE: 1" = 2'

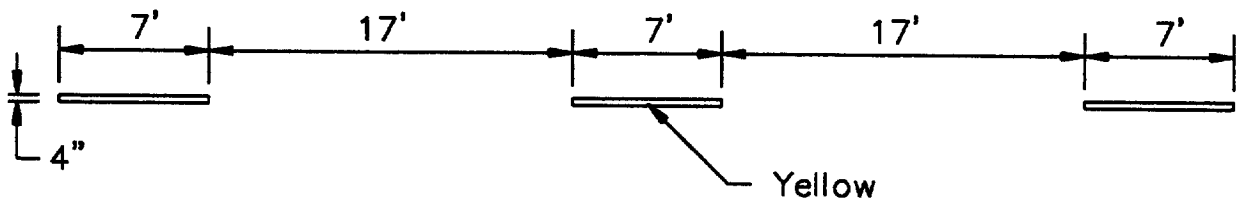

CENTERLINE STRIPING FOR SPEED ZONES 40 MPH OR LESS

CORPS OF ENGINEERS, U.S. ARMY, SACRAMENTO DISTRICT STANDARD DETAILS DATE: SEPT. 90 SITE DETAILS	S-13 127

NOTE: ALL LETTERING SHALL BE 1/8" MINIMUM HEIGHT.

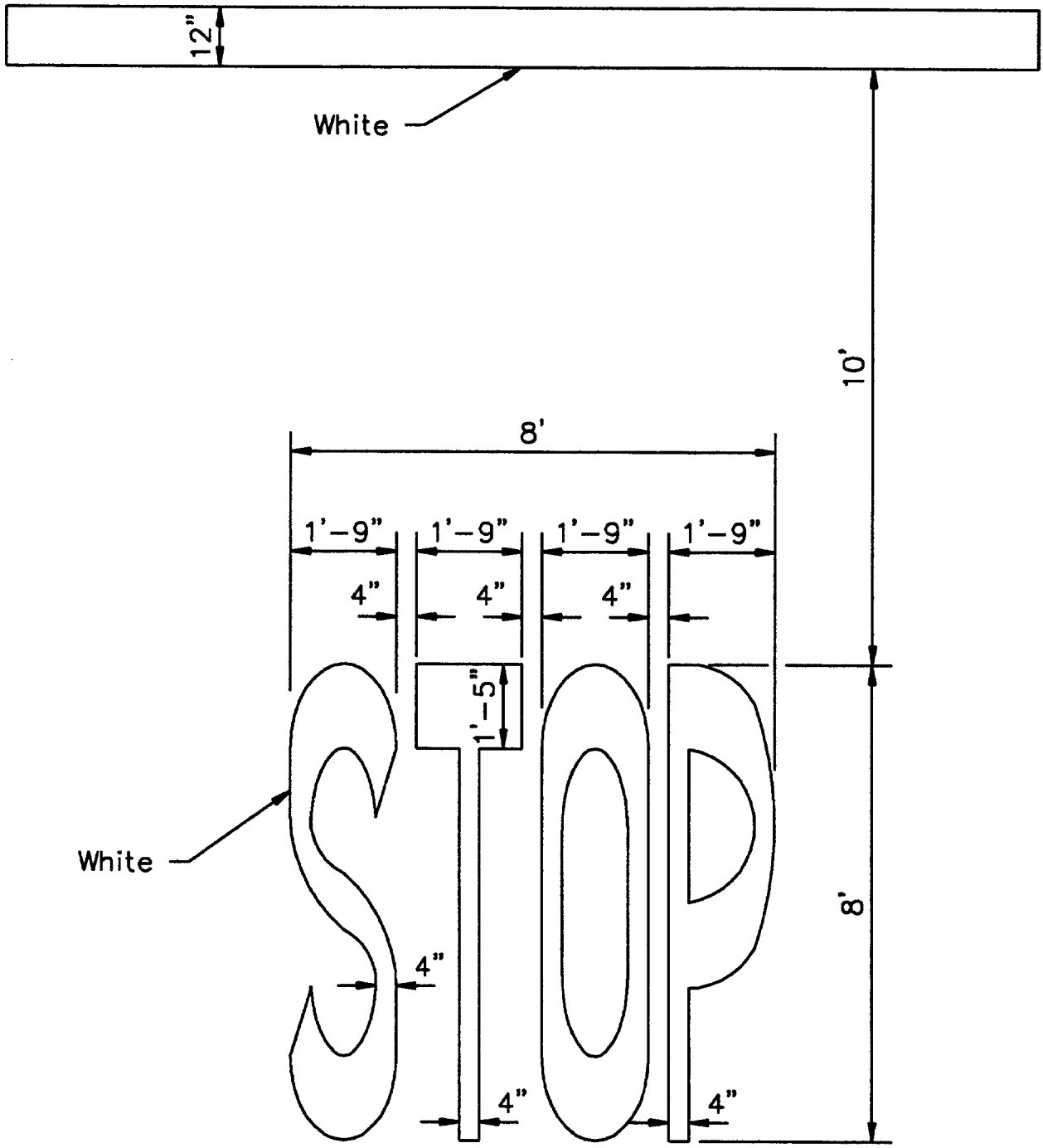

PAVEMENT STOP MARKING

NOT TO SCALE

CORPS OF ENGINEERS, U.S. ARMY, SACRAMENTO DISTRICT STANDARD DETAILS DATE: SEPT. 90 SITE DETAILS	S-14 128

NOTE: ALL LETTERING SHALL BE 1/8" MINIMUM HEIGHT.

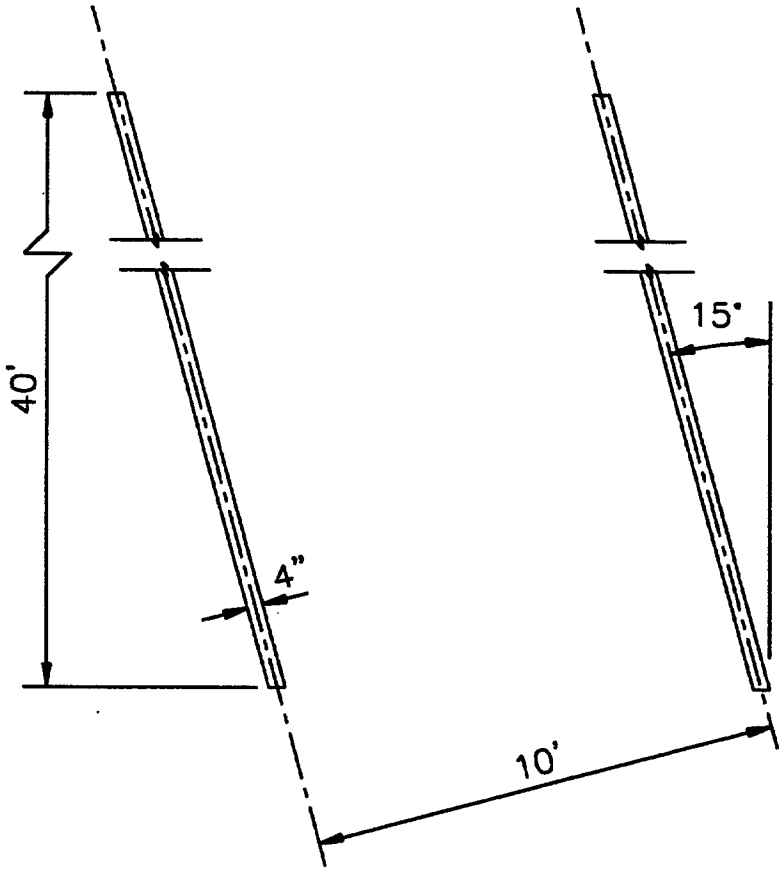

PARKING STRIPING

NOT TO SCALE

CORPS OF ENGINEERS, U.S. ARMY, SACRAMENTO DISTRICT STANDARD DETAILS DATE: SEPT. 90 SITE DETAILS	S-15 129